MODEL M1KN
125# FLANGED STRAINER

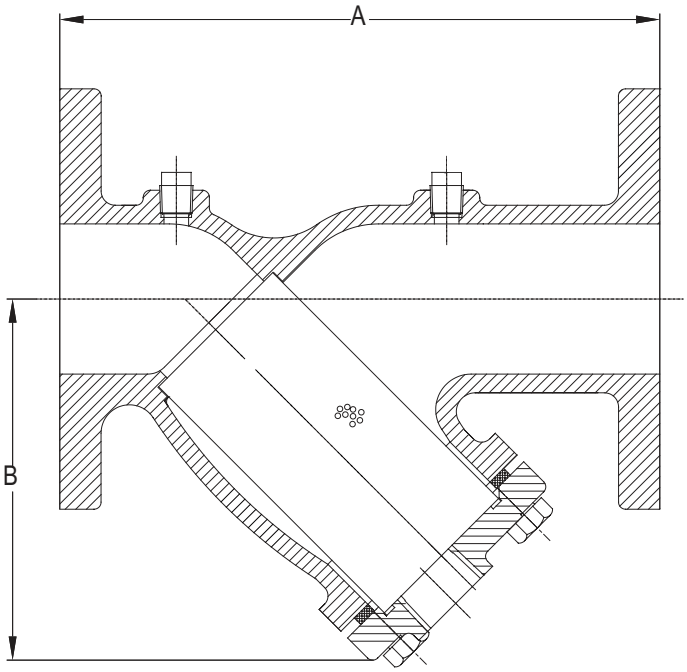

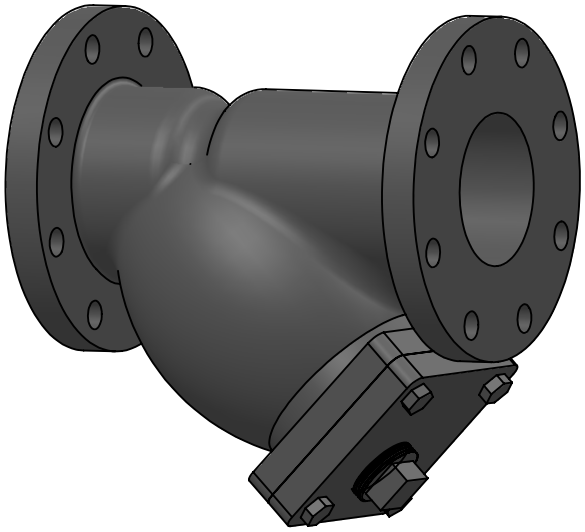

MATERIALS OF CONSTRUCTION
BODY, COVER - CAST IRON
SCREEN - 304 STAINLESS STEEL
GASKET - COMPOSTITION

OPERATING TEMPERATURE/PRESSURE
WATER, OIL, GAS...2" TO 12" - 200 PSI @ 150°F / 14" AND UP - 150 PSI @ 150°F
STEAM.....2" TO 12" - 125 PSI @ 450°F / 14" AND UP - 100 PSI @ 353°F

STANDARD SCREENS

SERIVCE	SIZE	PERF
LIQUID	2 - 4"	1/16"
	5" & UP	1/8"
STEAM	2" - 10"	3/64"
	12"	1/16"
	14" & UP	1/8"

QTY	PART NUMBER	PIPE SIZE		A	B	Cv# (GPM)	SCREEN AREA (in²)	PORT SIZE (NPT)	BLOWOFF SIZE (NPT)	WEIGHT (LBS)
		INCH	MM							
	M1KN0200	2"	50	7-7/8"	5-1/16"	62	28.84	1/4"	1/2"	17
	M1KN0250	2-1/2"	65	10"	6-1/8"	98	45.47	1/4"	1"	24
	M1KN0300	3"	80	10-1/8"	6-9/16"	155	54.68	1/4"	1"	31
	M1KN0400	4"	100	12-1/8"	8-1/16"	269	91.12	1/4"	1-1/2"	50
	M1KN0500	5"	125	15-5/8"	11"	364	143.94	1/4"	2"	86
	M1KN0600	6"	150	18-1/2"	12-5/8"	585	237.76	1/4"	2"	114
	M1KN0800	8"	200	21-5/8"	15-5/8"	942	345.30	1/4"	2"	203
	M1KN1000	10"	250	25-3/4"	17-3/4"	1572	537.30	1/4"	2"	293
	M1KN1200	12"	300	29-7/8"	21-5/16"	2261	596.07	1/4"	2"	489
	M1KN1400	14"	350	33-1/4"	26-3/4"	3479	1041	N/A	2"	772
	M1KN1600	16"	400	38-3/4"	30-1/8"	5060	1341	N/A	2"	994

#Cv IS THE FLOW RATE IN GALLONS OF 60°F WATER THAT WILL PASS THROUGH THE STRAINER IN 1 MINUTE AT A 1 PSI PRESSURE DROP.

NSF 372 - LEAD FREE
The wetted surface of this product contacted by consumable water contains less than one quarter of one percent (0.25%) of lead by weight. Material complies with state codes and standards, where applicable, requiring reduced lead content.

CUSTOMER:_____

PROJECT:_____

ENGINEER:_____

REV.	DATE

Metraflex for pipes in motion
2323 W. HUBBARD ST.
CHICAGO, IL 60612
TEL: 312-738-3800
FAX: 312-738-0415
WWW.METRAFLEX.COM

MODEL M1KN
125# FLANGED STRAINER

DRAWN BY: DKISH	DATE: 3/28/2019
APPROVED:	DATE:
SCALE: N/A	DRAWING NUMBER: M1KN-1