MODEL SDFL90
SUCTION DIFFUSER FLEX WITH 150# PLATE FLANGES AND A LR ELBOW

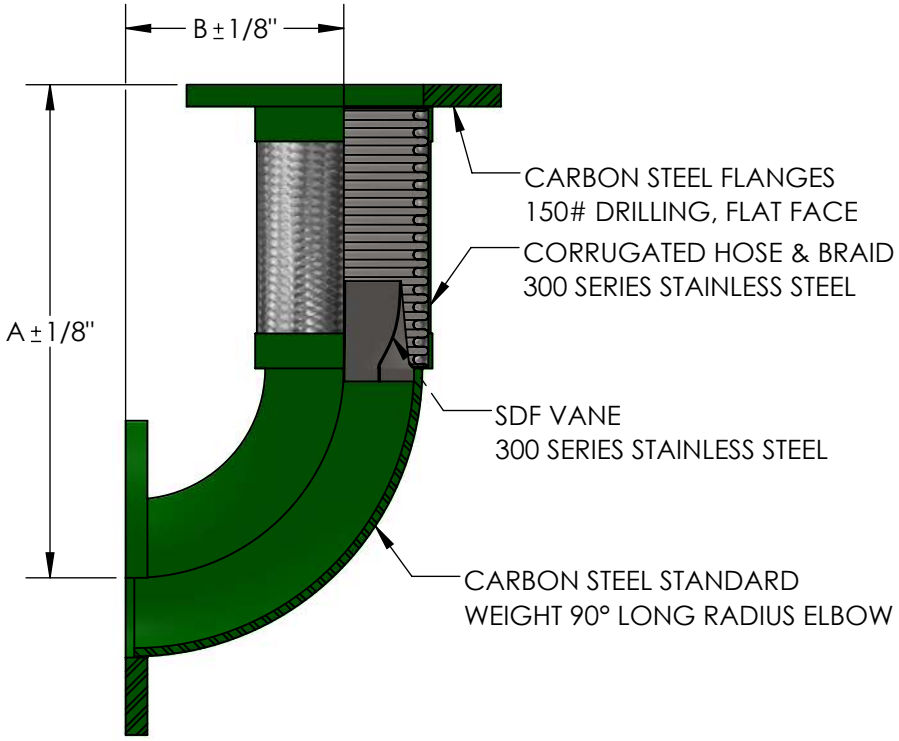

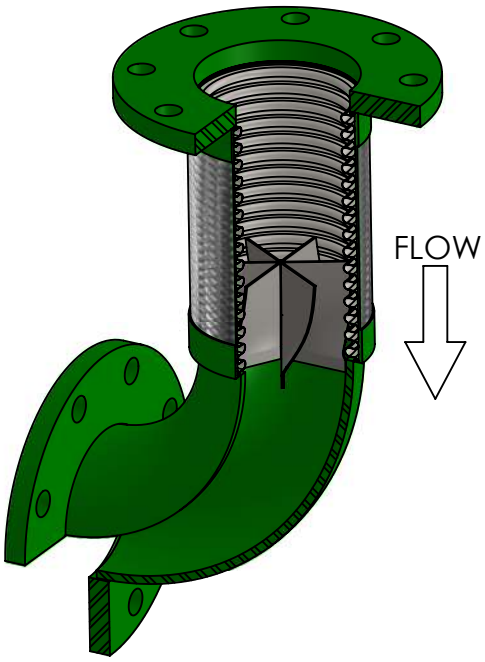

QTY	PART NUMBER	PIPE SIZE		A	B	PRESSURE RATING (PSI)*	WEIGHT (LBS)	PROJECT INFORMATION
		INCH	MM					
	SDFL900200	2"	50	11-1/2"	3-1/4"	516	13	
	SDFL900250	2-1/2"	65	12-1/4"	4"	387	19	
	SDFL900300	3"	80	13"	4-3/4"	316	22	
	SDFL900400	4"	100	14-1/2"	6-1/4"	232	31	
	SDFL900500	5"	125	18"	7-3/4"	191	43	
	SDFL900600	6"	150	19-1/2"	9-1/4"	165	56	
	SDFL900800	8"	200	23-1/4"	12-1/4"	234	104	
	SDFL901000	10"	250	27-1/4"	15-1/4"	230	163	
	SDFL901200	12"	300	31-1/4"	18-1/4"	161	233	
	SDFL901400	14"	350	34-1/4"	21-1/4"	150	275	

*FOR SAFE WORKING PRESSURE ABOVE 70°F, MULTIPLY THE PRESSURE SHOWN AT 70°F TIMES THE CORRECTION FACTOR OF THE REQUIRED TEMPERATURE.

TEMPERATURE (°F)	FACTOR
70	1.0
200	.91
300	.85
400	.78
500	.77
600	.76

MAX INTERMITTENT OFFSET FROM CENTERLINE 1/8"
MAX PERMANENT OFFSET FROM CENTERLINE 3/8"

NSF 372 - LEAD FREE

The wetted surface of this product contacted by consumable water contains less than one quarter of one percent (0.25%) of lead by weight. Material complies with state codes and standards, where applicable, requiring reduced lead content.

CUSTOMER:_____

PROJECT:_____

ENGINEER:_____

REV. 1	TEMP FACTOR UPDATED DATE 1/4/2017

Metraflex for pipes in motion
2323 W. HUBBARD ST.
CHICAGO, IL 60612
TEL: 312-738-3800
FAX: 312-738-0415
WWW.METRAFLEX.COM

MODEL SDFL90
SDF WITH 150# PLATE FLANGES AND A LR ELBOW

DRAWN BY: **DKISH**	DATE: **11/22/2013**
APPROVED: **JC**	DATE: **11/22/2013**
SCALE: N/A	DRAWING NUMBER: SDFL90-1