HOSE AND BRAID

APPLICATION & DESIGN GUIDE

Metraflex
for pipes in motion

2323 W. HUBBARD ST. • CHICAGO, IL 60612 • 312-738-3800 • FAX 312-738-0415 • http://www.metraflex.com

FOR ALL YOUR PIPING SPECIALTIES

How to Order Hose Assemblies

Please Provide the Following Information:

1. **Size of Hose**: Nominal Diameter
2. **System Application**: Flowing Media, Special Requirements
3. **Length of Hose**: Overall (End to End)
4. **Type of Hose**: Material(s) of Construction, Any Corrosive Conditions
5. **Fittings**: Size, Type, Alloy Each End
6. **Pressure or Vacuum**: Internal, External
7. **Temperature**: Operating, Ambient
8. **Installation**: Straight, Offset (Provide Sketch, if possible)
9. **Movement**: Constant or Intermittent

TABLE OF CONTENTS

1. **Engineering Data** **1-9**
2. **Stock Products** **10-13**
3. **Installation Instructions** **14**
4. **End Fittings** **15**
5. **Corrosion Data** **16-20**

SEE LAST PAGE FOR TERMS AND CONDITIONS

DESCRIPTION

Metraflex Hose and Braid Connectors are specifically designed to dampen or suppress noise, absorb vibration (horizontal, vertical, angular), accommodate thermal expansion and stresses, and adjust or correct for misalignment in piping systems. The isolation of any of the above problem areas will extend the life of the entire system substantially.

A Flexible Connector performs a different function from that of an expansion joint in that the connector flexes and bends but DOES NOT extend or compress axially. Conversely, a standard expansion joint DOES NOT flex or bend unless specifically designed to do so but is designed to extend and compress on its own axis. (Ask for our Expansion Joint or Metraloop catalog)

STANDARD CONSTRUCTION & DESIGN

A. Inner Corrugated Hose:
Type 304, 321 or 316 Stainless Steel
Bronze
(Optional Material available)

B. Outer Braid:
Type 304 Stainless Steel
Bronze
(Optional Material available)

C. End Fittings: See page 15.

PURPOSE

Flexible metal hose fulfills the needs of industry for hose having the unique properties of metals: high strength and high resistance to temperature and corrosion.

In some of its forms, flexible metal hose also serves as ducting, armor and conduit, again using to advantage the flexing ability of metals.

When corrugated metal hose is subjected to high internal pressure the hose is elongated beyond its ability to recover. The corrugations are stretched out of shape, and the flexibility of the hose is impaired. It is necessary, therefore, to equip the hose with a device which can flex with the hose, and prevent elongation under internal pressure. The outer braid is just such a device.

Braid is a tubular sheath of metal wires woven in a basket weave fashion. It is made to fit snugly over the hose, and is fastened to the ends of the hose. It is designed to be strong enough to withstand elongation for the full pressure rating of the hose. The braid alloy is usually similar to that of the hose with which it is used, but may be different for reasons of strength, corrosion resistance, etc.

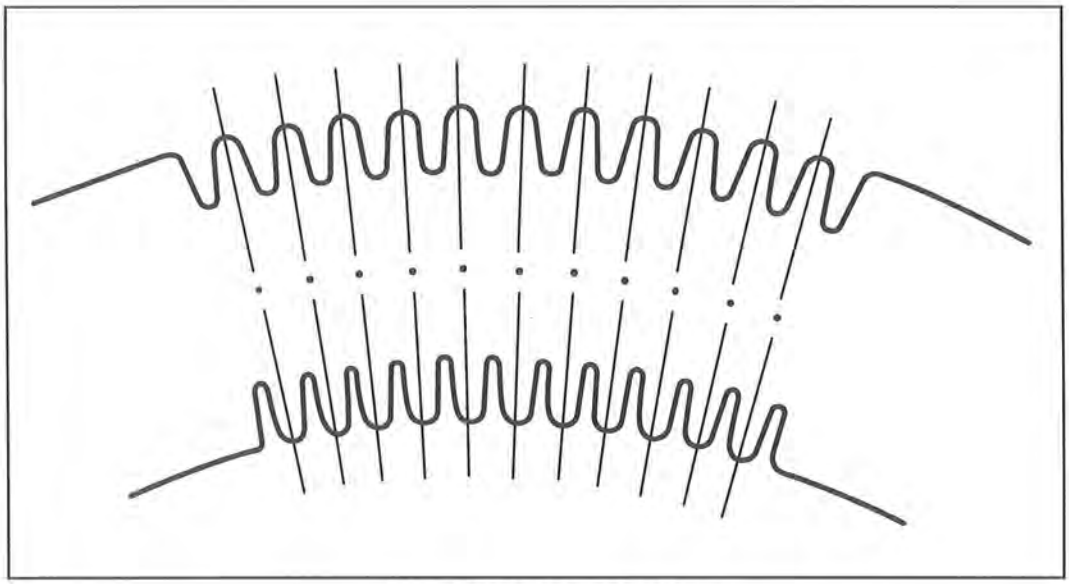

CORRUGATED METAL HOSE WITHOUT BRAID

DESIGN CONSIDERATIONS

SELECTION CRITERIA

The selection of flexible metal hose for a particular application is influenced by six primary considerations: Pressure, Temperature, Motion, Media, End Fittings and Size. Therefore, to make the best choice for a specific application, consider all the relevant operating factors against the properties of the various types of flexible metal hoses.

PRESSURE

The nominal pressure ratings of flexible metal hose varies according to type, material and size. Specific pressure ratings for each type of flexible metal hose are found in each section of the catalog. Under actual working conditions, pressure is affected by many other factors such as temperature, pulsating or shock conditions, and bending stresses. Page 5 explains how such factors specifically affect the properties of corrugated metal hose. Also, review the "Temperature Correction Factor Table" on page 5 for adjusting pressure ratings at operating temperatures higher than 70° F.

TEMPERATURE

The physical properties of any material varies with temperature. Limits for operating temperature are affected by the working pressure, the type of media being conveyed and the nature of the application. By careful selection of material, it is possible to provide flexible metal hose for a wide range of operating temperatures. The choice of hose type, metal alloy, end fitting and method of fitting attachment determines the temperature limit.

MOTION

Flexible metal hose is generally used in four types of applications:

1. To correct problems of misalignment
2. To provide flexibility in manual handling operations
3. To compensate for intermittent or constant movement
4. To absorb vibration

In all of these types, careful hose selection, design of the assembly, and installation are important for optimal service life. The flexibility of a hose is determined by its mechanical design and the inherent flexibility of its material. Specific information and data about Metraflex hose is found on pages 6 and 7.

MEDIA

The type of media being conveyed is an important consideration in the selection process. Metal hose is subject to corrosion by both the material flowing through it and the outside environment. For almost all applications, a metal hose can be selected that is resistant to the intended media. Since metal hose is a thin-walled product, it will not have the same total life as heavier walled tube or pipe of the same material. The "Corrosion Evaluation Data" table on pages 16-20 provides a guide to material selection.

END FITTINGS

The uses of corrugated and interlocked flexible metal hose are complemented by the comprehensive range of end fittings that are available. Such end fittings may be male or female pipe threads, unions, flanges, flared tube fittings, or other specially designed connectors. End fittings are attached by welding, silver brazing, soldering, and mechanical means, depending on the type of hose and alloy. Many of these common types of end fittings are shown on page 15. We will make or adapt any type fitting to our hose. We invite your inquiries.

SIZE

The size of flexible metal hose is expressed as a nominal diameter. The existing piping will normally dictate the size of the metal hose for a particular application. However, flow rate, velocity and pressure drop considerations may also influence the selection of the hose size.

METAL HOSE TERMINOLOGY

TYPICAL ASSEMBLY

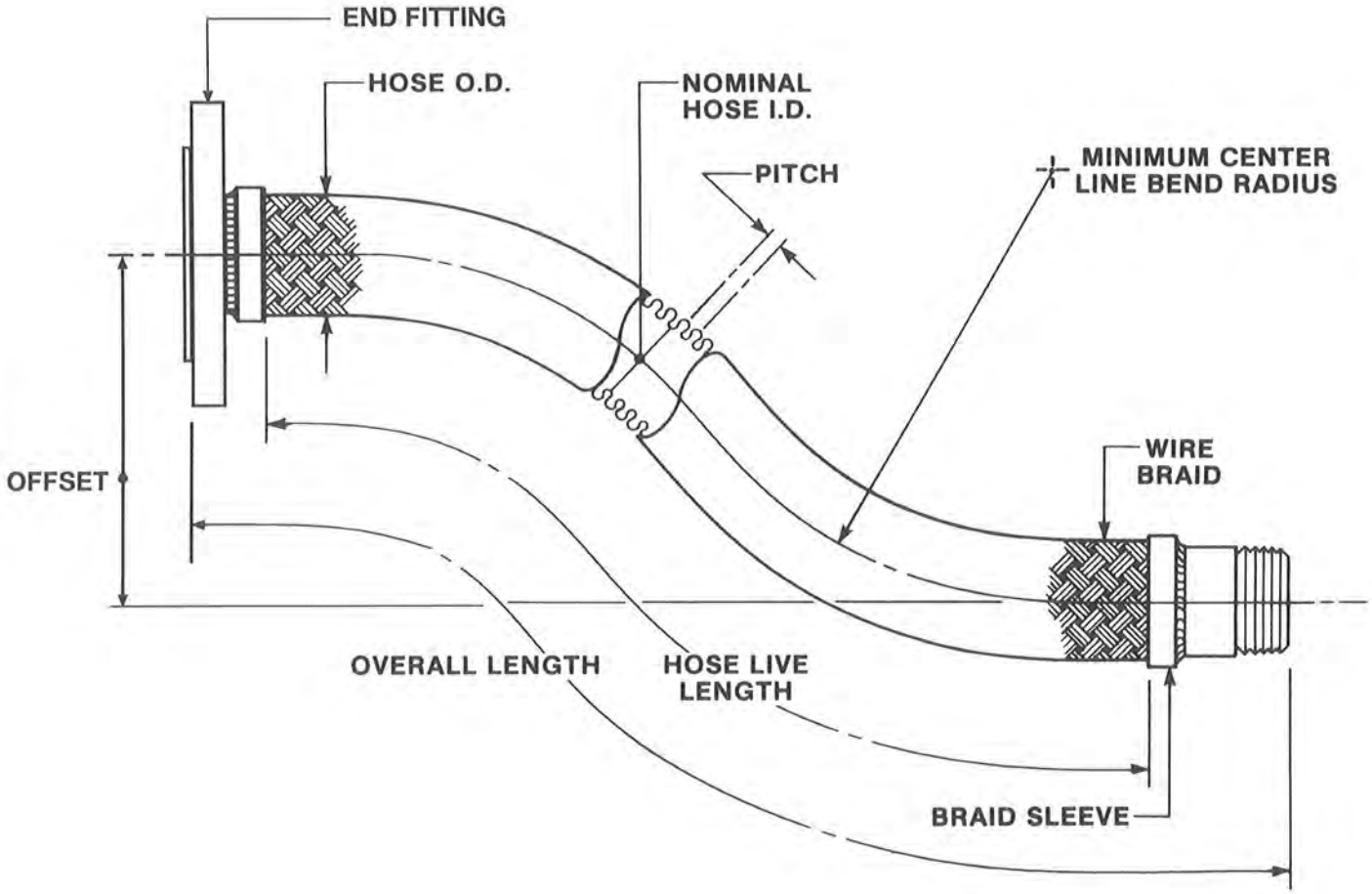

CORRUGATED METAL HOSE
CLASSIFICATION OF MOTIONS

RANDOM MOTION

Such motion is non-predictable and may occur from the manual handling of a hose assembly. Care must be taken to prevent over bending of the hose and to avoid external abrading of the wire braid. An armor covering of interlocked hose provides protection against abrasion.

ANGULAR MOTION

This type of motion occurs when one end of a hose assembly is deflected in a simple bend with the ends not remaining parallel.

FORMULA: $L = \frac{\pi R \theta}{180}$

L = Live Hose Length (inches)
π = 3.1416
R = Minimum Centerline Bend Radius for constant flexing (inches)
θ = Angular Deflection (degrees)

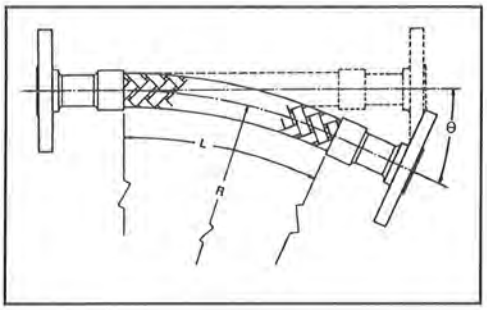

OFFSET MOTION

Offset motion occurs when one end of the hose assembly is deflected in a plane perpendicular to the longitudinal axis with the ends remaining parallel.

FORMULA: $L = \sqrt{6RT + T^2}$

$Lp = \sqrt{L^2 - T^2}$

L = Live Hose Length (inches)
Lp = Projected Live Hose Length (inches)
R = Minimum Centerline Bend Radius for constant flexing (inches)
T = Offset Motion to one side of Centerline (inches)

Note 1: When the offset motion occurs to both sides of the hose centerline, use total travel in the formula; i.e. 2 times "T".

Note 2: The offset distance "T" for constant flexing should never exceed 25% of the centerline bend radius "R".

Note 3: If the difference between "L" and "Lp" is significant, exercise care at installation to avoid stress on hose and braid at the maximum offset distance.

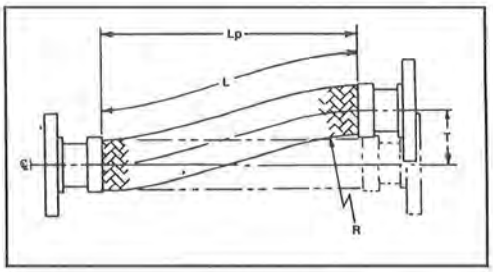

AXIAL MOTION

This type of motion occurs when there is extension or compression of the hose along its longitudinal axis. This motion is restricted to unbraided corrugated hose only and is limited to small movements, low pressures such as exhaust gas venting to atmosphere, and short lengths of hose.

Bellows Type Expansion Joints are specifically designed for this type of movement. Please see our Expansion Joint Design Guide.

CORRUGATED METAL HOSE GUIDE TO SPECIFICATION TABLE HEADINGS

The specification tables on the following pages tabulate the dimensions and properties of metal corrugated hose. The explanations on this page give complete descriptions for each of the column headings of those tables.

PROPERTIES

HOSE I.D. — This column lists the I.D. sizes of the corrugated hose.

BRAID TYPE — This column shows the number of wire braid covering(s) required for the indicated pressure rating.

HOSE O.D. — This column indicates the nominal outside diameter of each size stated in inches.

CENTERLINE RADIUS FOR STATIC BEND — This column states, in inches, the minimum bend radius to which a hose size may be bent when installed in conditions of no movement other than infrequent vibrations.

CENTERLINE RADIUS FOR INTERMITTENT FLEXING — This column states, in inches, the minimum bend radius to which a hose size may be bent when installed in conditions of controlled motion that occur on a regular or intermittent basis.

PRESSURE RATINGS — The maximum working, maximum test, and nominal burst pressures for each hose size shown are based on assemblies with welded-on fittings for stainless steel hose, and brazed-on fittings for bronze hose. The ratings are in PSIG at 70° F.

The Maximum Working Rating is the maximum operating pressure to which a hose assembly should be subjected. These ratings represent the application of a 4 to 1 safety factor against nominal burst pressure. For installations involving pulsating or surge pressures, the peak pressure should be limited to 50% of the maximum working pressure.

The Maximum Test Rating is the maximum pressure to which a straight hose assembly may be subjected without causing permanent deformation of the hose.

The Nominal Burst Rating is the pressure at which a hose assembly can be expected to rupture. This rating is predicated upon the hose being installed in a straight position and at normal room temperature.

TEMPERATURE CORRECTION FACTORS

Temperature in Degree F.	Material				
	BRONZE	STEEL	MONEL	304 STAINLESS	321 OR 316 ELC STAINLESS
ROOM TEMP	1.00	1.00	1.00	1.00	1.00
150	.92	.99	.93	.96	.97
200	.89	.97	.90	.92	.94
250	.86	.96	.87	.91	.92
300	.83	.93	.83	.86	.88
350	.81	.91	.82	.85	.86
400	.78	.87	.79	.82	.83
450	.75	.86	.77	.80	.81
500		.81	.73	.77	.78
600		.74	.72	.73	.74
700		.66	.71	.69	.70
800		.52	.70	.64	.66
900		.50		.58	.62
1000					.60
1100					.58
1200					.55
1300					.50
1400					.44
1500					.40

Temperature Correction Factors For Elevated Temperature Applications.

As the service temperature increases, the maximum pressure a hose assembly can withstand decreases. The material from which the hose is made and the method of fitting attachment (mechanical, soldered, welded, silver brazed) determines the maximum pressure at which an assembly can be used. By using the factors given in the chart, the approximate safe working pressure at elevated temperatures can be calculated for assemblies.

STAINLESS STEEL HOSE AND BRAID MAXIMUM DESIGN CONDITIONS

SEAM WELDED ANNULAR CORRUGATED HOSE

(see page 5 for column heading explanations)

BRAID TYPE*
U-Unbraided
S-Single Braided
D-Double Braided

NOMINAL HOSE I.D. IN INCHES	*BRAID TYPE	NOMINAL HOSE O.D. IN INCHES	MINIMUM CENTERLINE BEND RADIUS IN INCHES		MAX. WORKING PRESSURE @ 70° PSIG	MAX. TEST PRESSURE @ 70° PSIG	BURST PRESSURE @ 70° PSIG
			STATIC BEND	INTERMITTENT FLEXING			
1/4"	U	.48	1	5.0	180	270	–
	S	.54	1	5.0	2562	3846	10248
	D	.60	1	5.0	3125	4688	12500
3/8"	U	.66	1 1/4	5.5	100	150	–
	S	.72	1 1/4	5.5	1650	2475	6600
	D	.78	1 1/4	5.5	2200	3300	8800
1/2"	U	.82	1.0	6.0	75	113	–
	S	.88	1.0	6.0	1100	1650	4400
	D	.94	1.0	6.0	1625	2438	6500
3/4"	U	1.20	2.25	8.0	70	105	–
	S	1.26	2.25	8.0	792	1188	3168
	D	1.32	2.25	8.0	1267	1901	5068
1"	U	1.50	2.75	9.0	40	60	–
	S	1.56	2.75	9.0	571	857	2284
	D	1.62	2.75	9.0	914	1370	3656
1 1/4"	U	1.79	3.5	10.5	25	38	–
	S	1.85	3.5	10.5	531	797	2124
	D	1.91	3.5	10.5	850	1274	3400
1 1/2"	U	2.13	4.0	12	20	30	–
	S	2.19	4.0	12	472	708	1888
	D	2.25	4.0	12	755	1133	3020
2"	U	2.72	6.0	15.0	15	23	–
	S	2.80	6.0	15.0	500	750	2000
	D	2.88	6.0	15.0	750	1125	3000
2 1/2"	U	3.24	8.0	20.0	12	18	–
	S	3.32	8.0	20.0	387	581	1548
	D	3.40	8.0	20.0	600	900	2400
3"	U	3.79	9	22.0	10	15	–
	S	3.87	9	22.0	288	431	1152
	D	3.95	9	22.0	431	647	1724
4"	U	4.82	13	27.0	8	12	–
	S	4.92	13	27.0	232	348	928
	D	5.02	13	27.0	371	557	1484
5"	U	5.83	18	31.0	6	9	–
	S	5.98	18	31.0	200	330	800
	D	6.13	18	31.0	245	367	980
6"	U	6.85	19.0	36.0	4	6	–
	S	7.00	19.0	36.0	170	255	680
	D	7.15	19.0	36.0	300	450	1200
8"	U	9.00	20.0	40.0	2.7	4.1	–
	S	9.20	20.0	40.0	212	318	848
	D	9.40	20.0	40.0	260	390	1040
10"	U	11.00	25.0	50.0	2.2	3.3	–
	S	11.20	25.0	50.0	175	263	700
	D	11.40	25.0	50.0	220	330	880
12"	U	13.00	30	60.0	1.8	2.7	–
	S	13.20	30	60.0	160	240	640
	D	13.40	30	60.0	220	330	880
14"	U	16.46	35	70.0	1.7	2.6	–
	S	16.71	35	70.0	110	165	440
	D	–	35	70.0	160	235	640

Note: For higher pressures please consult Metraflex.

BRONZE HOSE AND BRAID MAXIMUM DESIGN CONDITIONS

BRONZE SEAM WELDED ANNULAR CORRUGATED HOSE

BRAID TYPE*
U-Unbraided
S- Single Braided
D- Double Braided

(see page 5 for column heading explanations)

NOMINAL HOSE I.D. IN INCHES	*BRAID TYPE	NOMINAL HOSE O.D. IN INCHES	MINIMUM CENTERLINE BEND RADIUS IN INCHES		MAX. WORKING PRESSURE @ 70° PSIG	MAX. TEST PRESSURE @ 70° PSIG	BURST PRESSURE @ 70° PSIG
			STATIC BEND	INTERMITTENT FLEXING			
1/4"	U	.470	1	6	100	150	–
	S	.530	1	6	800	1200	3200
	D	.590	1	6	1300	2300	5200
3/8"	U	.655	1 1/4	6	40	75	–
	S	.715	1 1/4	6	600	900	2400
	D	.775	1 1/4	6	1000	2000	4000
1/2"	U	.815	1 1/2	7.0	40	60	–
	S	.875	1 1/2	7.0	566	849	2265
	D	.935	1 1/2	7.0	753	1130	3012
3/4"	U	1.195	2 1/4	8.0	30	36	–
	S	1.255	2 1/4	8.0	468	701	1870
	D	1.315	2 1/4	8.0	622	933	2487
1"	U	1.495	3	10.0	26	39	—
	S	1.555	3	10.0	334	501	1335
	D	1.615	3	10.0	444	666	1776
1 1/4"	U	1.770	3.5	12.0	16	24	–
	S	1.840	3.5	12.0	306	459	1225
	D	1.950	3.5	12.0	407	611	1629
1 1/2"	U	2.110	4.0	13.5	15	22.5	–
	S	2.180	4.0	13.5	297	445	1187
	D	2.240	4.0	13.5	395	592	1579
2"	U	2.700	5.0	17.0	10	15	–
	S	2.790	5.0	17.0	210	315	840
	D	2.859	5.0	17.0	279	419	1117
2 1/2"	U	3.215	8.0	22	8	12	–
	S	3.305	8.0	22	194	291	775
	D	3.395	8.0	22	258	387	1031
3"	U	3.770	12.0	24	5	8	–
	S	3.860	12.0	24	166	249	665
	D	3.955	12.0	24	221	332	884
4"	U	4.85	14.0	26.0	8	12	–
	S	4.99	14.0	26.0	109	160	430
	D	5.13	14.0	26.0	175	260	700

Note: For higher pressures please consult Metraflex.

LIVE HOSE LENGTH FOR DEGREE OF BEND

Centerline Bend Radius In Inches	MINIMUM LIVE LENGTH		
	45°	90°	180°
1	1	2	4
2	2	3 1/2	7
3	2 1/2	5	10
4	3 1/2	6 1/2	13
5	4	8	16
6	5	10	20
7	5 1/2	11	22
8	6 1/2	13	26
9	7 1/2	14 1/2	29
10	8	16	32
11	9	18	36
12	10	19 1/2	39
13	10 1/2	21	42
14	11 1/2	22 1/2	45
15	12	24	48
16	13	26	52
17	13 1/2	27	54
18	14 1/2	29	58
19	15 1/2	30 1/2	61
20	16	32	64
21	17	33 1/2	67
22	17 1/2	35	70
23	18 1/2	36 1/2	73
24	19	38	76
25	20	40	80

Centerline Bend Radius In Inches	MINIMUM LIVE LENGTH		
	45°	90°	180°
26	21	42	83
27	21 1/2	43	86
28	22 1/2	44 1/2	89
29	23	46	92
30	24	48	95
31	24 1/2	49	98
32	25 1/2	51	101
34	27	54	108
36	28 1/2	57	114
38	30	60	120
40	32	63	126
45	36	72	144
50	40	80	160
55	45	90	180
60	49	97	194
65	53	105	210
70	56	112	224
80	65	130	260
90	73	145	290
100	80	160	320
120	95	190	380
140	112	225	450
160	128	255	510
180	143	285	570
200	160	320	640

MINIMUM LIVE LENGTH

Determine the centerline bend radius required for your application. Under the column headed "Centerline Bend Radius In Inches", find your radius and read horizontally to the desired degree of bend (45°, 90° or 180°). The number in that column will be the minimum live length required to make that degree of bend along the desired centerline radius.

NOTE: Add fitting length Dimension "A" (see page 15) to each end of hose for Overall Length.

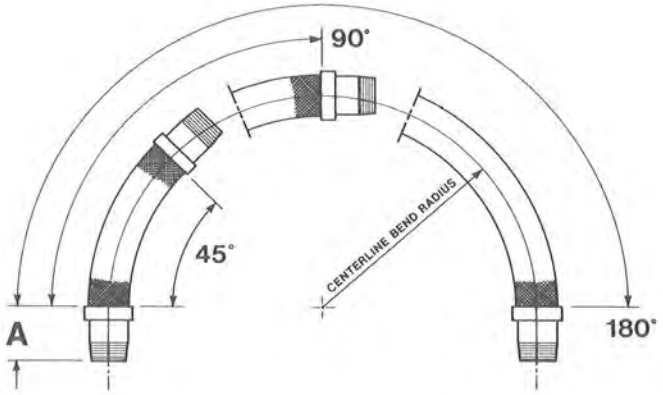

LIVE HOSE LENGTH FOR OFFSET MOTION

Centerline Bend Radius In Inches	INTERMITTENT OFFSET MOTION Max. Distance "T" from Centerline													
	1/8"	1/4"	3/8"	1/2"	3/4"	1"	1 1/2"	2"	3"	4"	5"	6"	8"	10"
5	2	3	3 1/2	4	5	6	7	7 3/4	10 1/4	12 1/4	13 1/2	15	18	20 1/2
6	2 1/4	3 1/4	3 3/4	4 1/4	5 1/4	6 1/4	7 1/2	8 1/4	10 3/4	12 3/4	14 1/4	16	19	21 1/2
7	2 3/8	3 3/8	4	4 3/4	5 3/4	6 3/4	8 1/4	9 1/4	11 1/2	13 1/2	15 1/4	17	19 3/4	23
8	2 1/2	3 1/2	4 1/4	5	6	7	8 3/4	10	12 1/2	14 1/2	16 1/4	18	21 1/2	24 1/4
9	2 5/8	3 3/4	4 1/2	5 1/4	6 1/2	7 1/2	9 1/4	10 3/4	13 1/4	15 1/4	17	19	22 1/2	25 1/2
10	2 3/4	4	4 3/4	5 1/2	6 3/4	8	9 3/4	11 1/4	13 3/4	16	18	20	23 1/2	26 1/2
11	2 7/8	4 1/8	5	5 3/4	7 1/4	8 1/4	10 1/4	11 3/4	14 1/2	16 3/4	18 3/4	20 3/4	24 1/2	27 1/2
12	3	4 1/4	5 1/4	6	7 1/2	8 1/2	10 1/2	12 1/4	15	17 1/2	19 1/2	21 1/2	25 1/2	28 3/4
13	3 1/8	4 1/2	5 1/2	6 1/4	7 3/4	9	10 3/4	12 3/4	15 3/4	18	20 1/4	22 1/2	26 1/4	29 3/4
14	3 1/4	4 3/4	5 3/4	6 1/2	8	9 1/4	11 1/4	13 1/4	16 1/4	18 3/4	21	23 1/2	27 1/4	30 3/4
15	3 3/8	4 7/8	5 7/8	6 3/4	8 1/4	9 3/4	11 3/4	13 1/2	16 3/4	19 1/4	21 3/4	24 1/4	28	31 3/4
16	3 1/2	5	6	7	8 1/2	10	12 1/4	14	17 1/4	20	22 1/2	25	29	32 3/4
17	3 5/8	5 1/8	6 1/4	7 1/4	8 3/4	10 1/4	12 1/2	14 1/2	17 3/4	20 1/2	23 1/4	25 1/2	29 3/4	33 1/2
18	3 3/4	5 1/4	6 1/2	7 1/2	9	10 1/2	13	15	18 1/4	21 1/4	24	26	30 1/2	34
19	3 7/8	5 3/8	6 5/8	7 3/4	9 1/4	10 3/4	13 1/4	15 1/4	18 3/4	21 3/4	24 1/2	26 3/4	31 1/4	35
20	4	5 1/2	6 3/4	8	9 1/2	11	13 1/2	15 3/4	19 1/4	22 1/2	25	27 1/2	32 1/4	36 1/4
22	4 1/8	5 3/4	7	8 1/4	9 3/4	11 1/2	14	16 1/4	20	23 1/4	25 3/4	28 1/2	33 1/2	37 1/2
24	4 1/4	6	7 1/4	8 1/2	10	12	14 1/2	17	20 3/4	24	26 1/2	29 1/2	34 3/4	39
26	4 3/8	6 1/4	7 1/2	8 3/4	10 1/2	12 1/2	15	17 1/2	21 1/2	25	27 3/4	30 3/4	36	40 1/4
28	4 1/2	6 1/2	7 3/4	9	11	13	15 3/4	18 1/4	22 1/2	26	29	32	37 1/2	41 1/2
30	4 3/4	6 3/4	8 1/4	9 1/2	11 3/4	13 1/2	16 1/2	19	23 1/2	27 1/4	30 1/2	33 1/2	39	43 3/4
35	5 1/4	7 1/4	9	10 1/4	12 1/2	14 1/2	18	20 3/4	26 1/4	29 1/2	32 3/4	36	42	47
40	5 1/2	7 3/4	9 1/2	11	13 1/2	15 1/2	19	22	27	31 1/4	35	38 1/2	44 3/4	50
45	6	8 1/4	10	11 3/4	14 1/4	16 1/2	20 3/4	23 1/2	28 1/2	33 1/4	37	41	47 1/2	53
50	6 1/4	8 3/4	10 3/4	12 1/4	15	17 1/2	21 1/2	24 3/4	30	35	39	43	50	56
60	6 3/4	9 1/2	11 3/4	13 1/2	16 1/2	19	23 1/4	27	33	38 1/4	43	47	54 1/2	61
70	7 1/4	10 1/4	12 3/4	14 3/4	17 3/4	20 1/2	25 1/4	29	35 1/2	41 1/2	46	51	58 3/4	65 3/4
80	7 3/4	11	13 1/2	15 1/2	19	22	27	31	38	44	49 1/2	54	62 3/4	70
90	8 1/4	11 3/4	14 1/4	16 1/2	20 1/4	23 1/2	28 1/2	33	40 1/2	46 3/4	52	57 1/4	66 1/4	74 1/4
100	8 3/4	12 1/4	15	17 1/2	21 1/4	24 1/2	30	35	42 1/2	49 1/4	55	60 1/2	69 3/4	78 1/4

IMPORTANT NOTE

The values shown in the shaded portion are applicable to static bends only. For intermittent flexing, the offset motion should never be greater than 25% of the centerline bend radius.

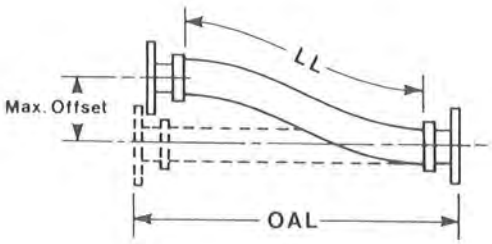

ASSEMBLY LENGTH

(LIVE LENGTH AND OVERALL LENGTH)

The live length and overall length of the assembly must be determined to complete the design. The live length is the flexible portion of an assembly: After the live length has been determined, the overall length is determined by adding the dimensions of the end fittings.

MODEL SST OR BBT

METAL CONNECTOR, THREADED

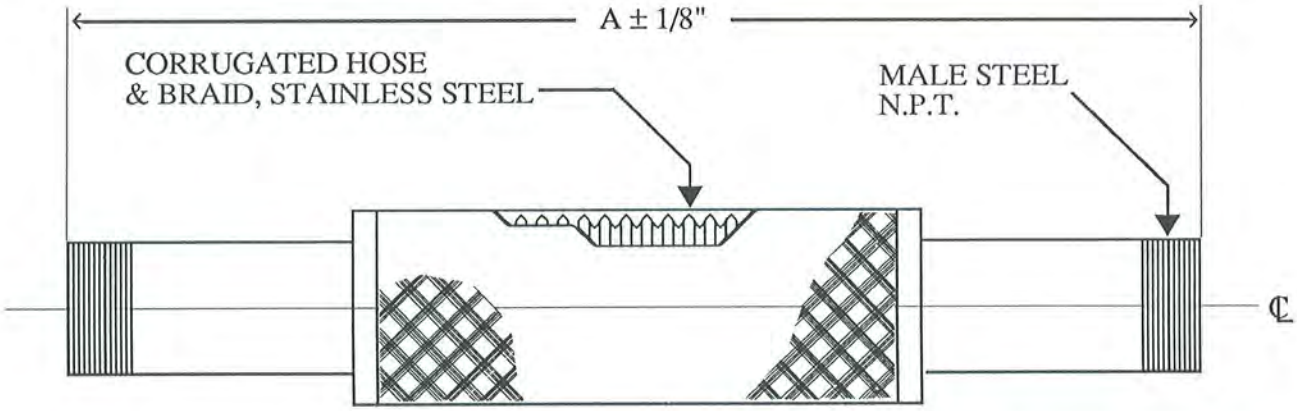

PIPE SIZE	A ± 1/8"	PRESSURE (PSI) @ 70° F.* BRZ.	S.S.
1/2"	10"	500	1300
3/4"	10"	370	750
1"	10"	250	605
1-1/4"	10"	200	570
1-1/2"	12"	200	525
2"	14"	170	455
2-1/2"	16"	—	345
3"	16"	—	290

MAX. PERMANENT OFFSET FROM ℄ 1/2"
MAX. INTERMITTENT OFFSET FROM ℄ 1/4"

*** See Page 5 for Temperature Correction Factor Table**

MODEL BBS

BRONZE CONNECTOR, SWEAT ENDS

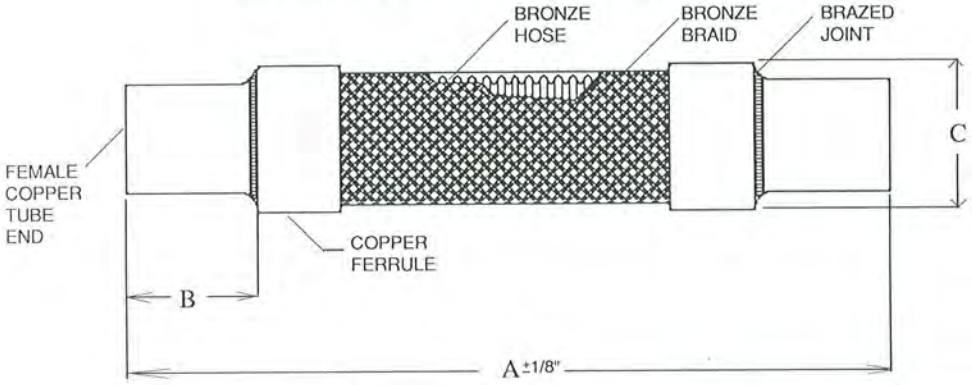

NOM. SIZE	DIMENSIONS A ± 1/4"	B ± 1/8"	C.MAX.	MAX. WORKING PRESS. @ 70°F*	APPROX. WEIGHT IN LBS.	PERMA-NENT LATERAL OFFSET
1/2"	10"	7/8"	1.031"	450	1	1"
3/4"	10"	1-1/4"	1.406"	340	1	3/4"
1"	10"	1-1/2"	1.781"	302	1	1/2"
1-1/4"	10"	1-5/8"	2.109"	280	2	3/8"
1-1/2"	12"	2"	2.438"	245	3	3/8"
2"	14"	2-1/2"	3.078"	190	4	3/8"
2-1/2"**	16"	2-29/32"	3.969"	320	3	3/4"
3"**	16"	3-13/32"	4.422"	302	3	1/2"

*** See Page 5 for Temperature Correction Factor Table**

**** Sizes 2-1/2" & 3" are stainless steel hose & braid.**

MODEL MM

STAINLESS STEEL PUMP CONNECTOR

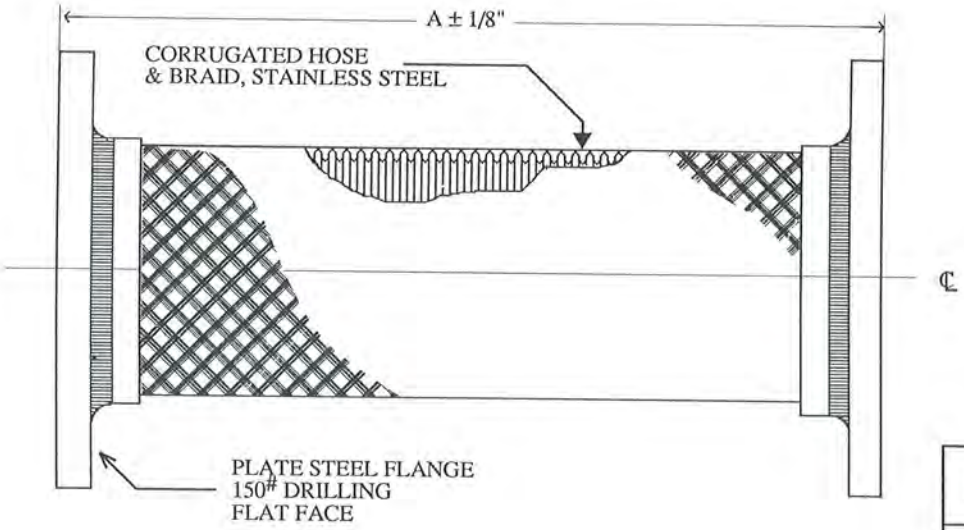

PIPE SIZE	A±1/8"	PRESS. @ 70° F.*
2"	9"	455
2.5"	9"	345
3"	9"	289
4"	9"	300
5"	11"	220
6"	11"	200
8"	12"	190
10"	13"	150
12"	14"	125
14"	14"	105

MAX. PERMANENT OFFSET FROM ℄ 3/8"

MAX. INTERMITTENT OFFSET FROM ℄ 1/8"

*** See Page 5 for Temperature Correction Factor Table**

MODEL SLP

STAINLESS STEEL PUMP CONNECTOR

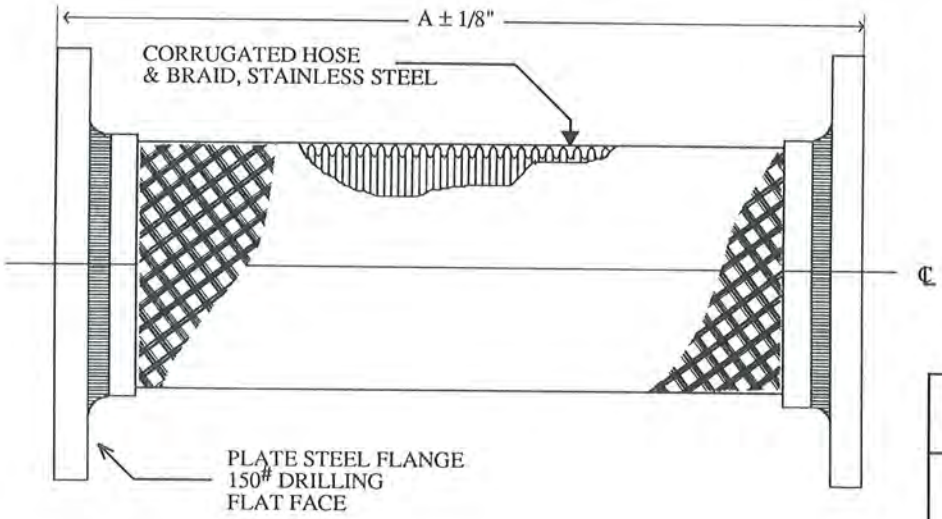

PIPE SIZE	A± 1/8"	PRESS. @ 70° F.*
2.5"	10-1/4"	345
3"	10-5/8"	289
4"	11-3/4"	300
5"	13-5/8"	220
6"	14-1/8"	200
8"	15-3/8"	190
10"	17-3/4"	150
12"	18-3/8"	125
14"	20"	105

MAX. PERMANENT OFFSET FROM ℄ 3/4"

MAX. INTERMITTENT OFFSET FROM ℄ 3/8"

*** See Page 5 for Temperature Correction Factor Table**

MODEL MLP

STAINLESS STEEL PUMP CONNECTOR

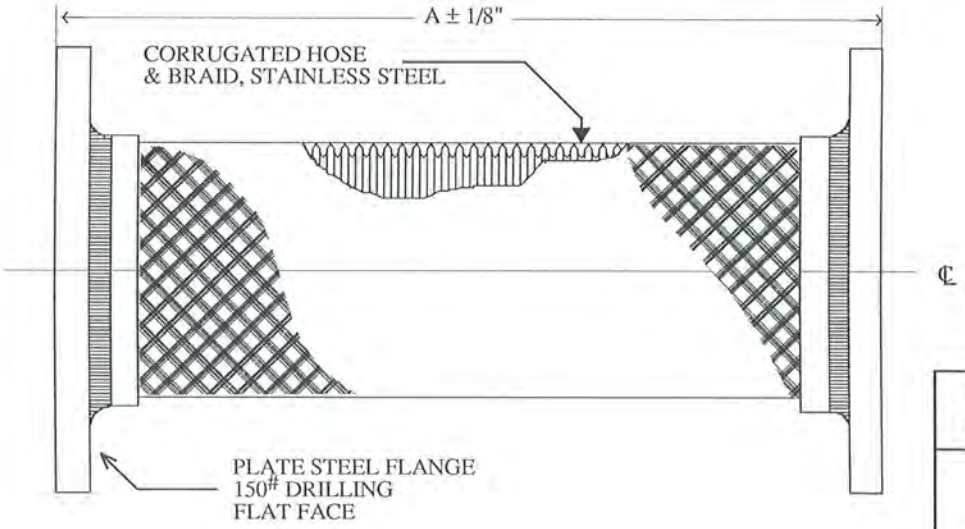

PIPE SIZE	A ± 1/8	PRESS. @ 70° F.*
2.5"	12"	345
3"	14"	289
4"	16'	300
5"	18"	220
6"	20"	200
8"	22"	190
10"	24"	150
12"	26"	125
14"	28"	105

MAX. PERMANENT OFFSET FROM ℄ 1"

MAX. INTERMITTENT OFFSET FROM ℄ 3/4"

*** See Page 5 for Temperature Correction Factor Table**

MODEL RSS

REDUCING STAILESS STEEL PUMP CONNECTOR

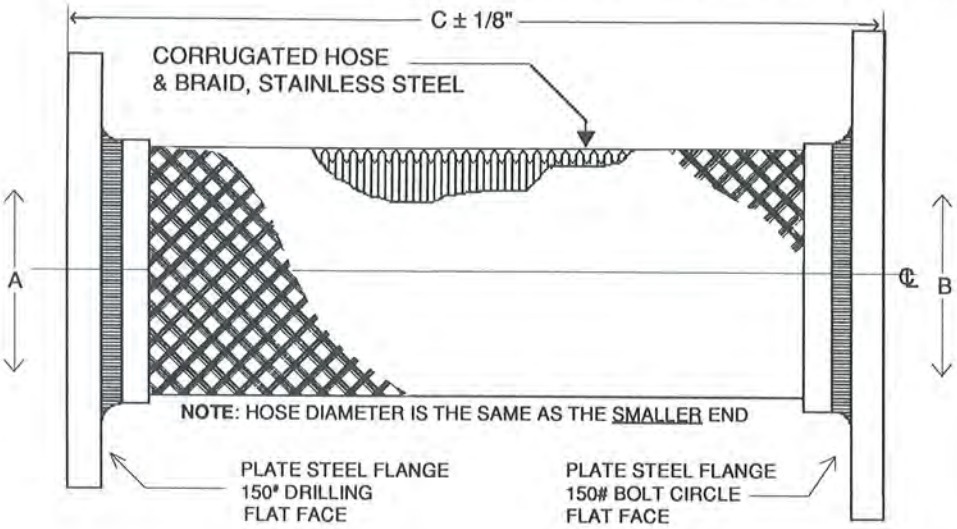

A PIPE SIZE	B PIPE SIZE	C FACE TO FACE	PRESS @ 70°F.*
2.5"	3"	9"	345
2.5"	4"	9"	345
3"	4"	9"	289
3"	5"	9"	289
4"	5"	9"	300
4"	6"	9"	300
5"	6"	11"	220
5"	8"	11"	220
6"	8"	11"	200
6"	10"	11"	200
8"	10"	12"	190
8"	12"	12"	190
10"	12"	13"	150

MAX. PERMANENT OFFSET FROM ℄ 3/8"

MAX. INTERMITTENT OFFSET FROM ℄ 1/8"

*** See Page 5 for Temperature Correction Factor Table**

MODEL GF

STAINLESS STEEL HOSE AND BRAID GROOVE BY FLANGE END AND GROOVED ENDS

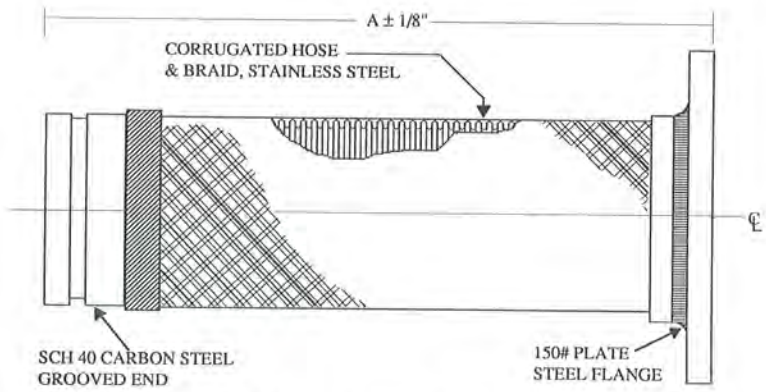

MODEL GG

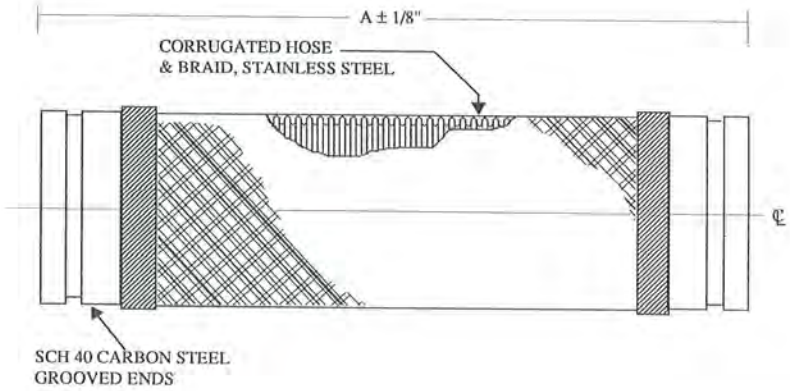

MAX. PERMANENT OFFSET FROM ℄ 3/8"
MAX. INTERMITTENT OFFSET FROM ℄ 1/8"
*** See Page 5 for Temperature Correction Factor Table**

PIPE SIZE	A ± 1/8	PRESS. @ 70° F*
2"	12"	450
2.5"	14	345
3"	14	289
4"	16	300
5"	17	220
6"	18	200
8"	20	190
10"	24	150
12"	25	125

MODEL RAF

REFRIGERATION VIBRATION ABSORBER

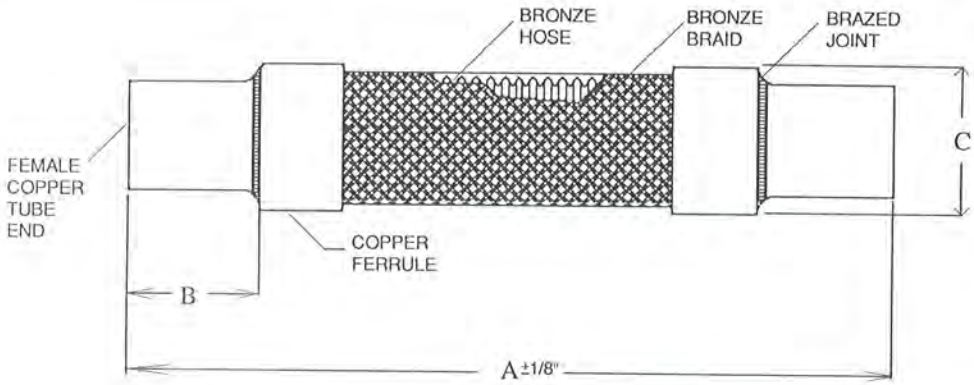

MODEL #	TO FIT COPPER TUBE NOM. SIZE	TO FIT COPPER TUBE ACTUAL O.D.*	NOM. HOSE I.D.	DIMENSIONS A ± 1/4"	DIMENSIONS B ± 1/8"	DIMENSIONS C MAX.	MAX. WORKING PRESS. AT 70°F**
RAF-2	1/8	1/4	1/4	7-1/2	1/2	0.672	450
RAF-3	1/4	3/8	5/16	8-1/4	5/8	0.766	450
RAF-4	3/8	1/2	3/8	9	3/4	0.859	450
RAF-5	1/2	5/8	1/2	9-3/4	7/8	1.031	450
RAF-6	5/8	3/4	1/2	10	1	1.031	450
RAF-7	5/8	3/4	3/4	11-1/4	1-1/8	1.406	340
RAF-8	3/4	7/8	3/4	11-1/2	1-1/4	1.406	340
RAF-9	1	1-1/8	1	13	1-1/2	1.781	302
RAF-10	1-1/4	1-3/8	1-1/4	14-3/4	1-5/8	2.109	280
RAF-11	1-1/2	1-5/8	1-1/2	17	2	2.438	245
RAF-12	2	2-1/8	2	20	2-1/2	3.078	190
RAF-13	2-1/2	2-5/8	2-1/2	24	2-29/32	3.969	320
RAF-14	3	3-1/8	3	27	3-13/32	4.422	302
RAF-15	3-1/2	3-5/8	3-1/2	32	3-29/32	5.000	150
RAF-16	4	4-1/8	4	33	4-13/32	5.406	150

ALL DIMENSIONS IN INCHES.
TESTED AND RECOGNIZED BY UNDERWRITERS LABORATORIES INC.
ALL UNITS CLEANED AND DEGREASED - PACKED IN POLY BAGS.

* Also identified as nominal size refrigeration and automotive tubing.

** Sizes from 2-1/2" employ stainless steel braided hose to assure high pressures.

INSTALLATION INSTRUCTIONS

Proper placement of Metraflex flexible pipe connectors is of prime importance. Ideally, they should be attached right to the pump, compressor, or other equipment in a straight line WITHOUT offset , tension, compression, or torque, and with the axis of the hose at right angles to the motion at the point of connection.

For maximum pump connector effectiveness, the connecting piping should be anchored immediately beyond the connector, as shown in Diagram A.

Vibration can, and usually will, travel through the pipelines, which are excellent conductors of vibration and noise. The best solution is to install flexible connectors right after and ahead of the equipment generating the vibration, thus isolating it.

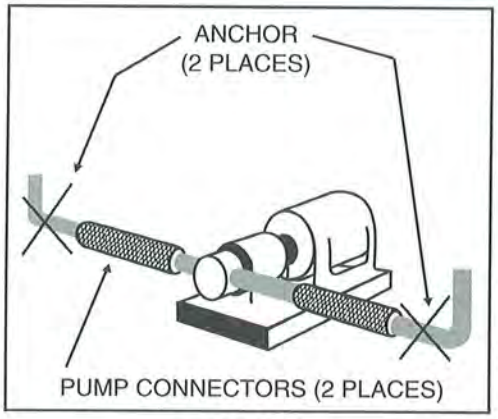

DIAGRAM A

If the amount of movement is greater than can be handled by a single standard connector, two connectors should be used and installed at right angles to each other, as shown in Diagram B.

When installed at right angles to the direction of pipe movement, Metraflex pipe connectors can also absorb large amounts of expansion. If this is the intention, they should be specifically designed for this purpose.

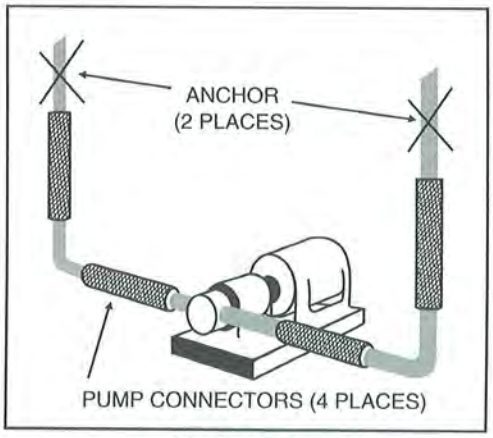

DIAGRAM B

If superior noise attenuation or axial movement is required, please consult the Elastomer (Rubber) Connectors and Expansion Joints guide for the type of connector best suited for your temperature and pressure requirements.

PLATE STEEL FLANGE

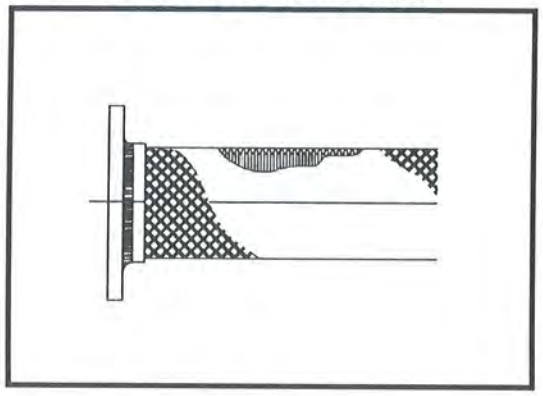

MALE PIPE NIPPLE

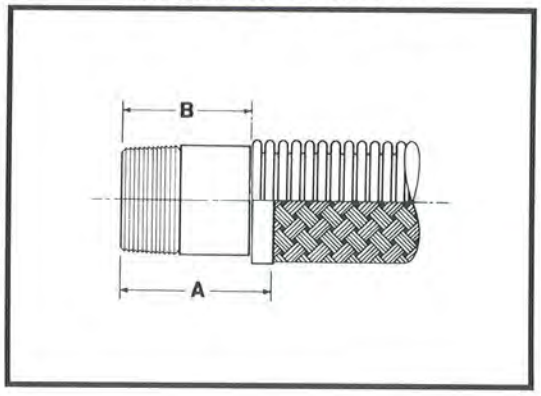

VANSTONE OR FLOATING FLANGE

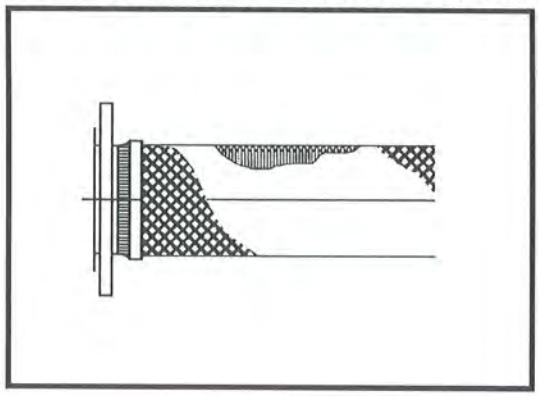

WELD NIPPLE/37-1/2° BEVEL

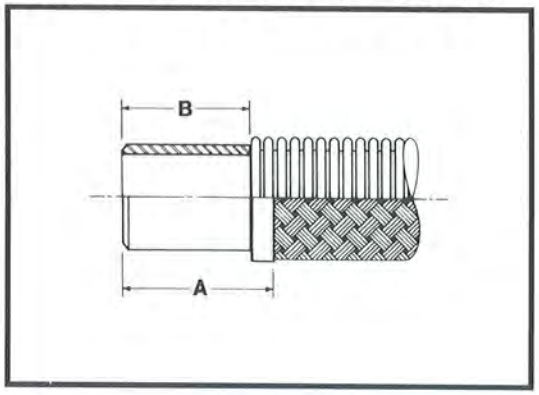

FEMALE PIPE COUPLING

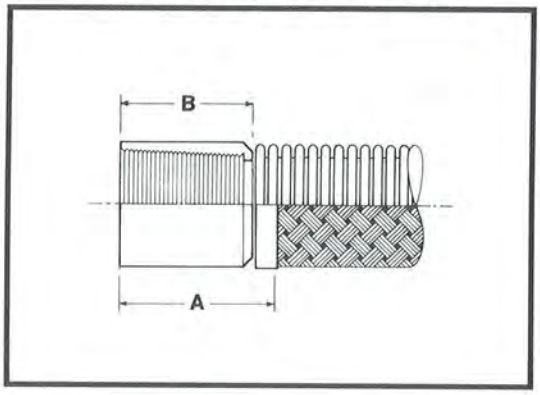

FEMALE UNION

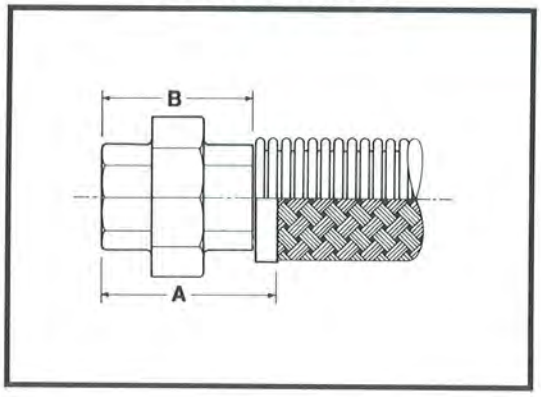

MALE HEX NIPPLE

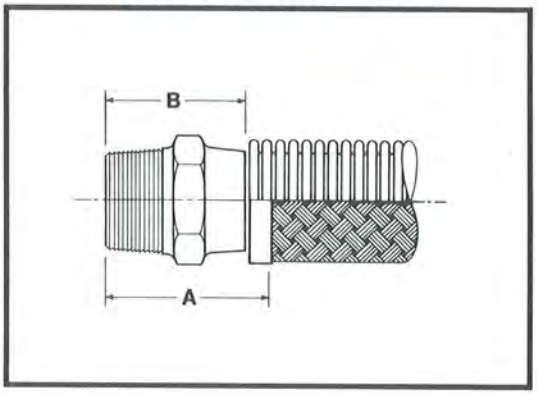

MALE PIPE W/HEX NUT

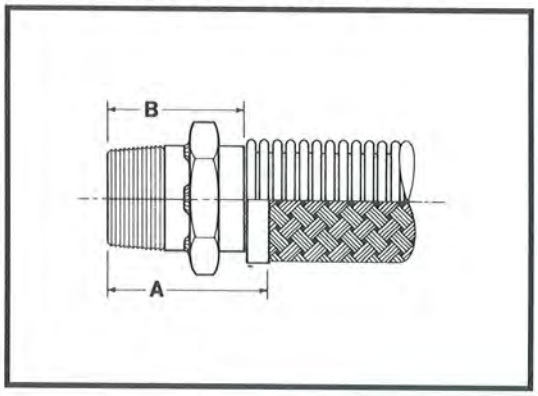

DESIGN CONSIDERATIONS
CORROSION EVALUATION DATA

This information may be used as a guide for the selection of flexible metal hose and of fitting material suitable for conveying the substances listed. However, this data should not be construed as advice to use or not use without further testing or investigation since variations in service conditions can influence resistance to corrosion.

The corrosion resistance of tin-lead solder, brass brazing and silver brazing alloys used to attach end fittings to metal hose may be considered equal to bronze in the table. Joints produced by welding end fittings to steel, stainless steel and monel hose may be considered equivalent to the corrosion resistance of the least resistant component parts.

INTERPRETATION OF CORROSION DATA

CLASS 1 Resistant . . . . . Less than .00035 inch penetration per month

CLASS 2 Partially Resistant . . . . . .00035 to .0035 inch penetration per month

CLASS 3 Non-Resistant . . . . . Greater than .0035 inch penetration per month

*Subject to decomposition (forming HCl) in presence of moisture
**Subject to pitting at air line or when allowed to dry
***Subject to attack in presence of H_2SO_4

Chemical	Temp. °F.	304 SS\321 SS	316L SS	Carbon Steel	Bronze	Monel
Acetic Acid 5%-20% Agitated or Aerated	70°	1	1	3	3	2
50%	70°	1	1	3	3	3
50%-80%	Boiling	3	2	3	3	3
80%	70°	1	1	3	3	1
100%	70°	1	1	3	3	1
100%	Boiling	3	2	3	3	2
100%-150lbs. pressure	400°	3	3	3	3	2
Acetic Anhydride	70°	1	1	3	3	2
	Boiling	1	1	3	3	2
Acetic Acid Vapors, 30%	Hot	3	2	3	3	3
100%	Hot	3	3	3	3	2
Acetone	Boiling	1	1	3	1	1
Acetyl Chloride	Cold	2	2	3	2	1
	Boiling	2	2	3	2	3
Acetylene Concentrated	70°	1	1	1	3	1
Commercially Pure	70°	1	1	1	3	1
Acid Salt Mixture 10% H_7SO_4 Sp, G, 1.07 + 10% $CuSO_4 \cdot 5\ H_2O$	Boiling	1	1	3	3	3
Alcohol, Ethyl, 70° & Boiling	70°	1	1	1	1	1
Alcohol, Methyl	70°	1	1	1	1	1
	(150°) Boiling	3**	2	3	1	1
Aluminum, Molten	1400°	3	3	3	3	3
Aluminum Acetate, Saturated	70° & Boiling	1	1	3	3	1

Chemical	Temp. °F.	304 SS\321 SS	316L SS	Carbon Steel	Bronze	Monel
Aluminum Chloride 10% Quiescent	70°	3	3	3	3	2
25% Quiescent	70°	1	1	3	3	2
Aluminum Flouride	70°	3	3	3	3	2
Aluminum Hydroxide, Saturated	70°	1**	1	1**	1	1
Aluminum Sulphate, 5%	150°	1**	1	3	3	1
10%	70°	1**	1	3	3	1
10%	Boiling	2**	1	3	3	1
Saturated	70°	1**	1	3	3	1
Saturated	Boiling	2**	1	3	3	1
Aluminum Potassium Sulphate (Alum) 2%-10%	70°	1	1	3	2	2
10%	Boiling	2	1	3	3	2
Saturated	Boiling	3	2	3	3	2
Ammonia (Anhydrous) All Concentration	70°	1	1	1	1	1
Gas	Hot	3	3	3	3	
Ammonia Liquor	70°	1	1	3	3	3
	Boiling	1	1	3	3	3
Ammonium Bicarbonate	70°	1	1	3	3	2
	Hot	1	1	3	3	2
Ammonium Bromide	70°	2	1	3	3	2
Ammonium Carbonate 1 & 5%	70°	1	1	1	3	3
Ammonium Chloride 1%	70°	1	1	2	3	1
10%	Boiling	1**	1**		3	2
28%	Boiling	2**	1**		3	2
50%	Boiling	2**	1**		3	2
Ammonium Hydroxide All Concentrations	70°	1	1	2	3	3

DESIGN CONSIDERATIONS
CORROSION EVALUATION DATA

Chemical	Temp. °F.	304 SS\321 SS	316L SS	Carbon Steel	Bronze	Monel
Ammonium Monophospate	70°	1	1	2	3	2
Ammonium Nitrate						
All Concentrate Agitated	70°	1	1	3	3	2
All Concentrate Aerated	70°	1	1	3	3	2
All Concentrate Saturated	Boiling	1	1	3	3	2
Ammonium Oxalate 5%	70°	1	1	2	3	-
Ammonium Perchlorate 10%	Boiling	1	1	2	3	-
Ammonium Persulphate 5%	70°	1	1		3	3
Ammonium Phosphate 5%	70°	1	1	2	3	3
Ammonium Sulphate						
1% Aerated or Agitated	70°	1	1	3	3	2
Ammonium Sulphate						
5% Aerated & Agitated	70°	1	1	3	3	2
10% Saturated	Boiling	2**	1**	3	3	2
Ammonium Sulphite 70° & Boiling	70°	1.	1	3	3	3
Amyl Acetate Concentrate	70°	1	1	2	1	1
Amyl Chloride	70°	1	1	3	2	2
Aniline						
3%	70°	1	1	2	3	2
Concentrated Crude	70°	1	1	1	3	2
Aniline Hydrochloride	70°	3	3		3	3
Antimony Trichloride	70°	3	3	3	3	3
Barium Carbonate	70°	1	1	2	1	2
Barium Chloride						
5% & Saturated	70°	1	1	3	2	2
Barium Hydroxide						
Aqueous Solution	Hot	1	1	2		-
Barium Nitrate						
Aqueous Solution	Hot	1	1	2		-
Barium Sulphate						
(Barytes-Blanc Fixe)	70°	1	1		1	2
Barium Sulfide						
Saturated Solution	70°	1	1	3	3	-
Benzene (Benzol) 70° or Hot	70°	1	1	2	1	2
Benzoic Acid	70°	1	1	1	1	-
Blood (Meat Juices)	Cold	1**	1	3		2
Borax 5%	Hot	1	1	2	1	2
Boracic Acid 5%	Hot or Cold	1	1			
Boric Acid						
5% Solution, 70° or Hot	70°	1	1	3	1	2
5% Solution	Boiling	1	1**	3	1	2
Saturated Solution	70°	1**	1**	3	2	2
Saturated Solution	Boiling	1**	1**	3	3	2
Bromine, Bromine Water	70°	3	3	3	3	3
Buttermilk	70°	1	1	3	3	2
Butyl Acetate		1	1	2		2

Chemical	Temp. °F.	304 SS\321 SS	316L SS	Carbon Steel	Bronze	Monel
Butyric Acid 5%	70-150°	1	1	3	2	2
Aqueous Soln Sp. G. .964	Boiling	1	1	3	3	2
Calcium Carbonate	70°	1	1	1		1
Calcium Chlorate						
Dilute Solution	70° or Hot	1	1	2		2
Calcium Chloride						
Dilute or Concen. Solution	70°	2**	1**	3	2	3
Calcium Chlorohypochlorite						
(Bleaching Powder) 1%	70°	3	3	3	2	3
5%	70°	3	3	3	2	3
Calcium Hypochlorite, 2%	70°	2**	1**	3	2	3
Calcium Hydroxide, 10-20%	Boiling	1	1	3	1	1
Calcium Sulphate, Saturated	70°	1	1	3	1	2
Carbonic Acid Saturated Soln.	70°	1	1	3	1	3
Carbolic Acid C.P.	70°or Boiling	1	1	3	2	1
Carbonated Water		1	1	3	2	3
Carbon Bisulfide	70°	1	1	2	2	2
Carbon Monoxide Gas	1400°					
	1600°	1	1	1	3	1
Carbon Tetrachloride						
C.P.	70°	1	1	2	1	1
Dry C.P.	Boiling	1	1	2	1	2
Commercial +1% Water		3**	3	3	2	2
Carnallite—Cold Saturated Soln. $KCl \cdot MgCl_2 \cdot 6H_2O$	Boiling	3	1**			
Cellulose		1	1			1
Chloracetic Acid	70°	3	3	3	2	2
Chlorbenzol Conc. Pure Dry	70°	1	1	2	2	2
Chloric Acid	70°	3	3	3	3	3
Chlorine Gas (Dry)	70°	3	2	2	1	2
(Moist)	70°	3	3	3	3	3
Chlorinated Water, Saturated		3**	2**	3		
Chloroform	70°	1	1	1	1	1
Chromic Acid						
5% C.P.	70°	1	1	3	3	3
10%	70°	3	2	3	3	3
Chromic Acid						
10% C.P.	Boiling	3	2	3	3	3
50% C.P.	70°	3	2	3	3	3
50% C.P.	Boiling	3	3	3	3	3
Commercial 50% (Cont. SO_3)	70°	3	3	3	3	3
Commercial 50% (Cont. SO_3)	Boiling	3	3	3	3	3
Chromium Plating Bath	70°	1	1	2		3
Citric Acid, 5% Still	70-150°	1	1	3	1	2
15% Still	70°	1	1	3	2	2
15% or Concentrated	Boiling	2	1	3	2	3
Coffee	Boiling	1	1	3	1	1

DESIGN CONSIDERATIONS
CORROSION EVALUATION DATA

Chemical	Temp. °F.	304 SS\321 SS	316L SS	Carbon Steel	Bronze	Monel
Copper Acetate (Sat. Sol.)	70°	1	1	3		2
Copper Carbonate (Sat. Sol.) in 50% NH_4OH		1	1		3	-
Copper Chloride, 1% Agitated	70°	2**	1**	3	3	3
1% Agitated	158°	3	3	3	3	3
1% Aerated	70°	2**	1**	3	3	3
5% Agitated	70°	3**	2**	3	3	3
5% Aerated	70°	3**	3**	3	3	3
Copper Cyanide (Sat Sol)	Boiling	1	1		3	2
Copper Nitrate						
1% Still, Agitated & Aerated	70°	1	1	3	3	3
5% Still, Agitated or Aerated	70°	1	1	3	3	3
50% Aqueous Solution	Hot	1	1	3	3	3
Copper Sulphate						
5% Agitated Still or Aerated	70°	1	1	3	2	3
Saturated Solution	Boiling	1	1	3	2	3
Creosote (Coal Tar)	Hot	1	1	2	1	2
Creosote Oil	Hot	1	1	2	2	2
Cyanogen Gas	70°	1	1			
Dichloroethane (Dry)	Boiling	1	1	3	3	2
Dinitrochlorobenzene Melted & Solidified	70°	1	1	3		-
Dyewood Liquor	70°	1***	1	3		2
Epsom Salt (Magnesium Sulfate)	Hot & Cold	1	1	3	1	2
Ethers	70°	1	1	2	1	2
Ethyl Acetate (Conc. Sol.)	70°	1	1	2	1	2
Ethyl Chloride	70°	1	1	2	2	1
Ethylene Chloride	70°	1	1	2	2	1
Ethylene Glycol	70°	1	1	2	1	1
Ferric Chloride						
1% Solution Still	70°	2**	1**	3	3	3
1% Solution	Boiling	3	3	3	3	3
5% Solution, Agitated, Aerated	70°	3	3	3	3	3
Ferric Hydroxide (Hydrated Iron Oxide)	70°	1	1	3		2
Ferric Nitrate						
1%-5% Quiescent or Agitated	70°	1	1	3	3	3
1%-5% Aerated	70°	1	1	3	3	3
Ferric Sulphate						
1%-5% Quiescent or Agitated	70°	1**	1	3	3	3
1%-5% Aerated	70°	1**	1	3	3	3
10%	Boiling	1**	1	3	3	3
Ferrous Chloride Saturated Solution	70°	3	1	3	2	–
Ferrous Sulphate Dilute Solution	70°	1	1	3	2	3
Fluorine (Gas) Moist	70°	3	3	3	3	3
Formaldehyde 40% Solution		1**	1**	2	1	1

Chemical	Temp. °F.	304 SS\321 SS	316L SS	Carbon Steel	Bronze	Monel
Formic Acid, 5% Still	70°	2	1	3	2	2
5% Still	150°	2	1	3	2	3
Fuel Oil	Hot	1	1	2	1	2
Containing Sulphuric Acid		3	2		3	2
Furfural	70°	1	1	2	1	2
Gallic Acid, 5%	70-150°	1	1	3		2
Saturated	212°	1	1	3		2
Gasoline	70°	1	1	2	1	1
Gelatin		1	1	3	1	1
Glue Dry	70°	1	1	1	2	2
Solution – Acid	70-140°	2**	1	2	3	2
Glycerine	70°	1	1	2	1	1
Hydrochloric Acid All Concentrations	70°	3	3	3	3	3
Hydrocyanic Acid	70°	1	1	3	3	2
Hydrofluoric Acid	70°	3	3	3	3	1
Hydrofluosilic Acid	70°	3	3	3	2	2
Hydrogen Peroxide	70°	1***	1	3	3	2
	Boiling	2***	1	3	3	2
Hydrogen Sulphide (Dry)	70°	1	1	2	1	3
(Wet)	70°	2***	1***	3	3	3
Hyposulphite Soda (Hypo)		1	1			–
Ink	70°	2***	1	3	3	1
Iodine	70°	3	3	3	3	3
Iodoform	70°	1	1	3		2
Kerosene	70°	1	1	2	1	2
Lactic Acid, 1%	70°	1	1	3	2	2
1%	Boiling	1	1	3	3	2
5%	70°	1	1	3	2	2
5%	150° Boiling	2	1	3	3	2
10%	70°	2	1	3	2	2
10%	150° Boiling	3	2	3	3	2
Concentrated	70°	2	1	3	2	2
Concentrated	Boiling	3	2	3	3	2
Lead (Molten)	750°	2	2		3	3
Lead Acetate 5%	Boiling	1	1	3		2
Linseed Oil	70°	1	1	2	2	1
Plus 3% H_2SO_4	390°	2	1	3	3	1
Magnesium Chloride						
1% Quiescent	70°	1**	1	3	2	1
1% Quiescent	Hot	3	2**	3	2	1
5% Quiescent	70°	1**	1	3	2	1
5% Quiescent	Hot	3	2**	3	2	1
Magnesium Oxychloride	70°	3	2**	3		–
Magnesium Sulphate	Hot & Cold	1	1	3	1	1

DESIGN CONSIDERATIONS
CORROSION EVALUATION DATA

Chemical	Temp. °F.	304 SS\321 SS	316L SS	Carbon Steel	Bronze	Monel
Malac Acid	Hot & Cold	2	1	3		2
Mash	Hot	1	1			2
Mayonnaise	70°	1**	1	3		2
Mercury		1	1	1	3	3
Mercuric Chloride Dilute Sol.	70°	3	3	3	3	3
Methanol (Methyl Alcohol)		1	1	2	1	1
Milk, Fresh or Sour		1	1	3	1	2
Mixed Acids						
53% H_2SO_4 + 45% HNO_1	Cold	1	1	3	3	3
Molasses		1	1	2	1	1
Muriatic Acid	70°	3	3	3	3	2
Mustard	70°	1**	1**	3		2
Naptha, Crude	70°	1	1	2	2	1
Naptha, Pure	70°	1	1	2	2	1
Naphthalene Sulfonic Acid	70°	1	1	3		1
Nickel Chloride Solution	70°	1**	1**	3	2	2
Nitrating Solutions	Cold & Hot	2	2		2	3
Nickel Sulphate	Cold & Hot	1	1	3	1	1
Niter Cake	Fused	2	1	3		2
Nitric Acid						
5%-50%-70%	Boiling	1	1	3	3	3
65%	70°	1	1	3	3	3
65%	Boiling	2	2	3	3	3
Concentrated	70°	1	1	3	3	3
Concentrated	Boiling	3	3	3	3	3
Fuming Concentrated	70-110°	1	1	3	3	3
Fuming Concentrated	Boiling	3	3	3	3	3
Nitrous Acid 5%	70°	1	1	3	3	3
Oils, Crude	Cold & Hot	1***	1***	A	2	1
	Cold & Hot	1***	1		2	1
Oleic Acid	70-400°	1**	1	2	2	2
Oxalic Acid						
5%-10%	70° & Boiling	1	1	3	2	2
10%	Boiling	3	3	3	2	2
25%-50%	Boiling	3	3	3	2	1
Paraffine	Cold & Hot	1	1	2	1	1
Phenol (See Carbolic Acid)						
Petroleum Ether		1	1	2		2

†Mild steel severely stressed subject to caustic embrittlement.

Chemical	Temp. °F.	304 SS\321 SS	316L SS	Carbon Steel	Bronze	Monel
Phosphoric Acid						
1%	70°	1*	1*	3	3	2
1%	Boiling	1	1	3	3	2
1%—45 lbs Pressure	284°	1	1	3	3	2
5% Quiescent or Agitated	70°	1	1	3	3	2
5% Aerated	70°	1	1	3	3	2
10% Quiescent	70°	3	1	3	3	2
10% Agitated or Aerated	70°	3	2	3	3	2
10%-50%	Boiling	1	1	3	3	3
80%	70°	3	3	3	3	2
80%	230°	3	3	3	3	3
85%	Boiling	3	3	3	3	3
Pictic Acid	70°	1	1	3	3	3
Potassium Bichromate, 25%	70°	1	1		3	2
25%	Boiling	1	1		3	2
Potassium Bromide	70°	2**	1**	3	2	2
Potassium Carbonate 1%	70°	1	1	2	2	1
Potassium Carbonate	Hot	1	1	2	3	1
Potassium Chlorate						
Sat. at 212°	Boiling	1	1	2	3	3
Potassium Chloride						
1% Quiescent	70°	1**	1**	3	2	1
1% Agitated or Aerated	70°	1	1	3	2	1
5% Quiescent	70°	1**	1**	3	2	1
5% Agitated or Aerated	70°	1	1	3	2	1
5%	Boiling	1	1	3	2	1
Potassium Chromium Sulfate						
5%	70°	1**	1	3	2	–
Sp. G. 1.6	Boiling	3	3	3	3	–
Potassium Cyanide	70°	1	1	2	3	2
Potassium Ferricyanide, 5%-25%	*70°	1	1	3		2
25%	Boiling	1	1	3		2
Potassium Ferrocyanide, 5%	70°	1	1	3		2
Potassium Hydroxide, 5%	70°	1	1	2†	2	1
27%	Boiling	1	1	2†	2	1
50%	Boiling	2	1	3	2	1
Potassium Hypochlorite	70°	2	2	3	3	3
Potassium Nitrate						
1%-5% Still or Agitated	70°	1	1	3	2	1
1%-5% Aerated	70°	1	1	3	2	1
50%	70°	1	1	3	2	1
50%	Boiling	1	1	3		1
Molten	1022°	1	1	3		–
Potassium Oxalate		1	1			–
Potassium Permanganate, 5%	70°	1	1	2		3
Potassium Sulphate						
1%-5% Still or Agitated	70°	1	1	2	1	2
1%-5% Aerated	70°	1	1	2	1	2
	Hot	1	1	3	1	2
Potassium Sulphide (Salt)		1	1	3		–

DESIGN CONSIDERATIONS
CORROSION EVALUATION DATA

Chemical	Temp. °F.	304 SS\321 SS	316L SS	Carbon Steel	Bronze	Monel
Pyrogallic Acid		1	1	2		–
Quinine Bisulphate (Dry)		2	1	3		–
Quinine Sulphate (Dry)		1	1	3	2	2
Sea Water	70°	1**	1**	3	2	1
Sewage		1***	1***		1	1
Silver Bromide		2**	1**	3	3	–
Silver Chloride		3	3	3	3	3
Silver Nitrate		1	1	3	3	3
Soap	70°	1	1	2	1	1
Sodium Acetate (Moist)		1**	1	3		2
Sodium Bicarbonate						
All Concentrations	70°	1	1	3	2	1
5% Still	150°	1	1	3	2	1
Sodium Bisulphate, Solution	70°	1***	1***	3	2	2
Saturated Solution	70°	3	3	3	2	2
2 g + 1 g H_2SO_4 liter	68°	3	1***	3	2	2
Sodium Carbonate, 5%	70-150°	1	1	2	2	1
5%-50%	Boiling	1	1	2	2	1
Molten	1650°	3	3	3	3	1
Sodium Chloride, 5% Still	70-150°	1**	1	3	2	1
20% Aerated	70°	1**	1	3	2	1
Saturated	70°	1**	1	3	2	1
Saturated	Boiling	2**	1	3	2	1
Sodium Cyanide	70°	1	1	2	3	–
Sodium Fluoride, 5% Solution	70°	2**	1**	3	1	1
Sodium Hydroxide	70°	1	1	2	2	1
Sodium Hypochlorite, 5% Still		2**	1**	3	2	3
Sodium Hyposulphite	70°	1***	1	3		1
Sodium Nitrate	Fused	1	1	2	1	2
Sodium, Perchlorate, 10%	70°	1	1			–
	Boiling	1	1			–
Sodium Phosphate	70°	1	1	2	2	2
Sodium Sulphate, 5% Still	70°	1	1	3	1	1
All Concentrations	70°	1	1	3	1	1
Sodium Sulphide, Saturated		2**	1	3	3	2
Sodium Sulphite, 5%	70°	1	1	3	2	2
10%	150°	1	1	3	2	2
Sodium Thiosulphate						
Saturated Solution	70°	1	1***	3	3	1
Acid Fixing Bath (Hypo)	70°	1	1	3	3	2
25% Solution	70° & Boiling	1	1***	3	3	2
Stannic Chloride Solution Sp. G. 1.21	70° & Boiling	3	3	3	3	3
Stannous Chloride, Saturated		3	1	3		3
Steam		1	1	3	1	1
Stearic Acid	70°	1	1	3	2	2

Chemical	Temp. °F.	304 SS\321 SS	316L SS	Carbon Steel	Bronze	Monel
Starch, Aqueous Solution		1	1			2
Strontium Hydroxide		1	1			–
Strontium Nitrate Solution	Hot	1	1	3		2
Sulphur, Moist	70°	2**	1**	3	3	2
Molten	266°	1	1	3	3	1
Molten	833°	3	3	3	3	3
Sulphur Chloride (Dry)		3	3	3	1	2
Sulphur Dioxide Gas (Moist)	70°	2	1	3	2	3
Gas (Dry)	575°	1	1	3	1	2
Sulphuric Acid						
5%-10%	70°	3	2	3	2	3
5%-10%	Boiling	3	3	3	3	3
50%	70°	3	3	3	3	3
50%	Boiling	3	3	3	3	3
Concentrated	70°	1	1	3	2	3
Concentrated	Boiling	3	3	3	2	3
Concentrated	300°	3	3	3	2	3
Fuming	70°	3	2	3	2	3
Sulphurous Acid, Saturated	70°	3	2	3	2	3
Saturated – 60 lb. Pressure	250°	3	2	3	2	3
Saturated – 70-125 lb. Pressure	310°	3	2	3	2	3
150 lbs. Pressure	375°	3	2	3	2	3
Sulphurous Spray	70°	3	3	3	3	3
Tannic Acid	70°	1	1	3	1	3
	150°	1	1		1	3
Tanning Liquor	70°	1	1			1
Tar		1	1	2	1	2
Tartaric Acid		1	1	3	1	2
Tin	Molten	3	3	3	3	–
Trichloracetic Acid	70°	3	3	3	2	3
Trichlorethylene (Dry)	70°	1**	1	3	1	1
(Moist)					2	–
Varnish	70°	1	1	2	1	1
Water		1	1	2	1	1
Yeast		1	1		3	1
Zinc	Molten	3	3	3	3	3
Zinc Chloride, 5% Still	70°	1**	1**	3	3	2
	Boiling	2**	2**	3	3	2
Zinc Cyanide, Moist	70°	1	1	3		–
Zinc Nitrate, Solution	Hot	1	1	3		–
Zinc Sulphate		1	1	3	2	2

Terms and Conditions

1. All quotations are subject to approval, acceptance and correction at the home office. Any errors in quotations resulting in orders will be corrected and resubmited to the customer for their acceptance or refusal.

No prices may be made up from information other than that shown in the tables.

2. All prices are F.O.B. factory, Chicago, Illinois, and are quoted exclusive of any taxes.

Shipments boxed for trans-ocean export, add 10% to total trade prices.

Terms: Net 30 days from date of invoice.

3. Cancellation or alteration of an order or return of any product by Buyer may not be made without advance written consent of manufacturer and shall be subject to a cancellation charge. Custom products are not returnable.

A 20% minimum restocking charge shall be placed on any returned goods.

4. We will not be responsible for delays in shipping due to conditions beyond our control such as strikes, fires, or accidents.

5. Any claims for shortages or damaged products must be made in writing within 10 days after receipt of shipment.

6. Prices subject to change without notice.

Design and Dimensional Specifications

The products illustrated reflect the design characteristics at time of printing.

Metraflex reserves the right to change dimensions, material, or methods of construction without notice. Please contact the factory for certified prints (exact dimensions) when necessary.

Limited Warranty

All products are warranted to be free of defects in material and workmanship for a period of one year from the date of shipment, subject to the limitations below.

If the purchaser believes a product is defective the purchaser shall: (a) Notify the manufacturer, state the alleged defect and request permission to return the product. (b) If permission is given, return the product with transportation prepaid. If the product is accepted for return and found to be defective, the manufacturer will, at its discretion, either repair or replace the product, F.O.B. factory, within 60 days of receipt, or refund the purchase price. Other than to repair, replace or refund as described above, purchaser agrees that manufacturer shall not be liable for any loss, costs, expenses or damages of any kind arising out of the product, its use, installation or replacement, labeling, instructions, information or technical data of any kind, description of product or use, samples or model, warnings or lack of any of the foregoing. NO OTHER WARRANTIES, WRITTEN OR ORAL, EXPRESS OR IMPLIED, INCLUDING THE WARRANTIES OF FITNESS FOR A PARTICULAR PURPOSE AND MERCHANTABILITY, ARE MADE OR AUTHORIZED. NO AFFIRMATION OF FACT, PROMISE, DESCRIPTION OF PRODUCT OF USE OR SAMPLE OR MODEL SHALL CREATE ANY WARRANTY FROM MANUFACTURER, UNLESS SIGNED BY THE PRESIDENT OF MANUFACTURING. These products are not manufactured, sold or intended for personal, family or household purposes.

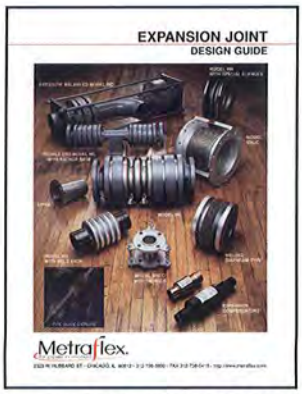

• METAL BELLOWS EXPANSION JOINTS

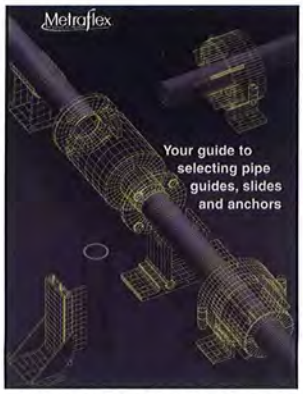

• GUIDES, SLIDES AND ANCHORS

• EXPANSION LOOPS

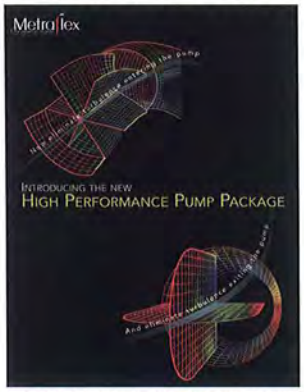

• HIGH PERFORMANCE

• SILENT CHECK VALVES

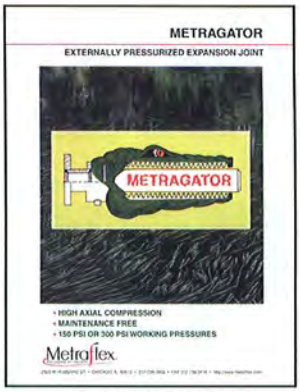

• METRAGATOR EXPANSION JOINTS

• CAST IRON STRAINERS

• RUBBER JOINTS

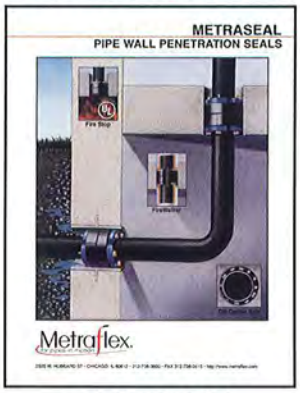

• METRASEAL

Metraflex®
for pipes in motion

Call or write for information on any of these other
METRAFLEX PRODUCTS

2323 W. HUBBARD ST. • CHICAGO, IL 60612 • 312-738-3800 • FAX 312-738-0415 • http://www.metraflex.com

Distributed by:

© THE METRAFLEX COMPANY, 2004. All rights reserved.
Printed in U.S.A.