# SGB SLIDE GUIDE FOR SIZES 5" - 8"

SPECIFICATIONS:

1. PRE-ENGINEERED TO SAVE CALCULATION AND INSTALLATION TIME.

2. BASES HAVE PTFE SLIDE BEARING PADS COMPOSED OF 100% VIRGIN POLYTETRAFLUOUROETHLENE.

3. SLIDES ARE FABRICATED CARBON STEEL SUPPORTS, BEARING SURFACES HAVE A POWDER COATED FINISH, PROVIDING A FLAT SMOOTH SURFACE.

4. CAPABLE OF SUPPORTING CONSTANT LOADS UP TO 2,000 LBS @ 70°F.

5. PTFE SLIDE ASSEMBLIES PERMIT SMOOTH, UNRESTRAINED MOVEMENT OF THE PIPE AND REDUCE OVERTURNING MOMENTS ON THE SUPPORT STRUCTURE.

6. PTFE IS CHEMICALLY INERT AND RESISTS ATTACK BY CHEMICALS, HUMIDITY, AND OTHER ELEMENTS FOUND IN HARSH ENVIRONMENTS.

7. SELF-LUBRICATING & MAINTENANCE FREE.

8. MAX TEMPERATURE: 400°F.

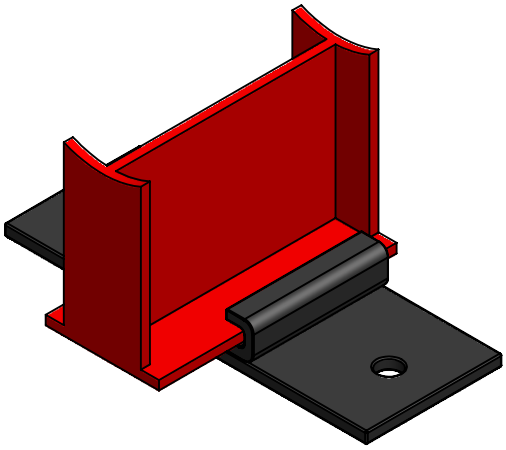

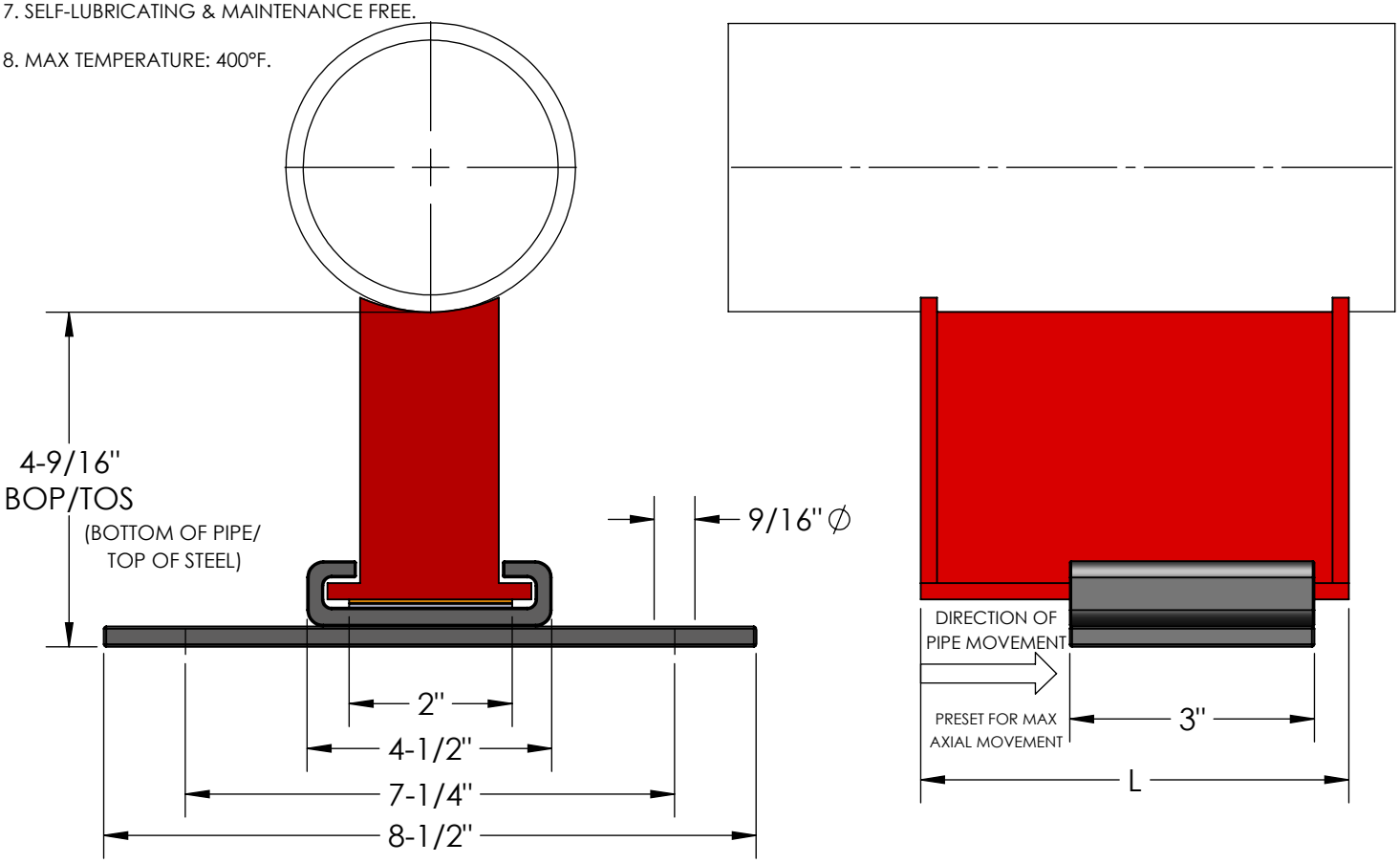


| QTY | L | AXIAL MOVEMENT | WEIGHT | MAX INSULATION THICKNESS |
|---|---|---|---|---|
| | 6" | 4" | 4.9 LBS | 3-1/2" |
| | 12" | 10" | 9.2 LBS | |

MATERIAL: ASTM A36 CARBON STEEL
FINISH: POWDER COATED

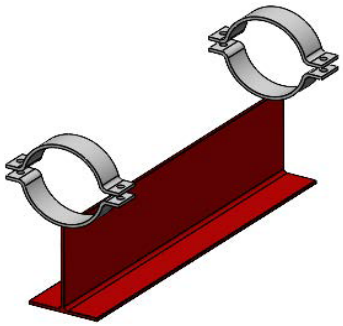

CLAMP OPTION AVAILABLE

| | |
|---|---|
| REV. 1 | BOP DIMENSION — DATE 05/21/2024 |


Metraflex® for pipes in motion
2323 W. HUBBARD ST.
CHICAGO, IL 60612
TEL: 312-738-3800
FAX: 312-738-0415
WWW.METRAFLEX.COM


**MODEL SGB BOLT-DOWN BASE**
SLIDE GUIDE ASSEMBLY 5" - 8"

| | |
|---|---|
| DRAWN BY: **DEVINR** | DATE: **8/24/2022** |
| APPROVED: | DATE: |
| SCALE: N/A | DRAWING NUMBER: SGB050-080 |