MODEL PGIV - 4" INSULATION
STYLE IV SPIDER TYPE GUIDE

GUIDE HARDWARE

MATERIAL: CARBON STEEL
FINISH: ONE COAT OF PAINT
MODELS 23-28 HAVE 2 BOLTS
MODELS 29-36 HAVE 4 BOLTS
FOR COPPER TUBE CLAMPS USE MODEL PGIVC

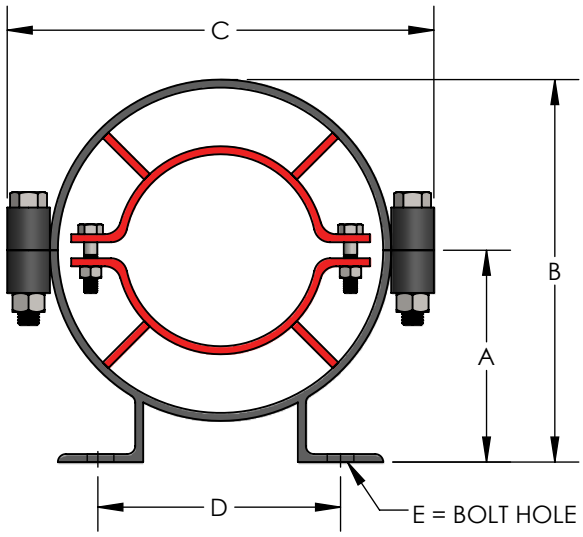

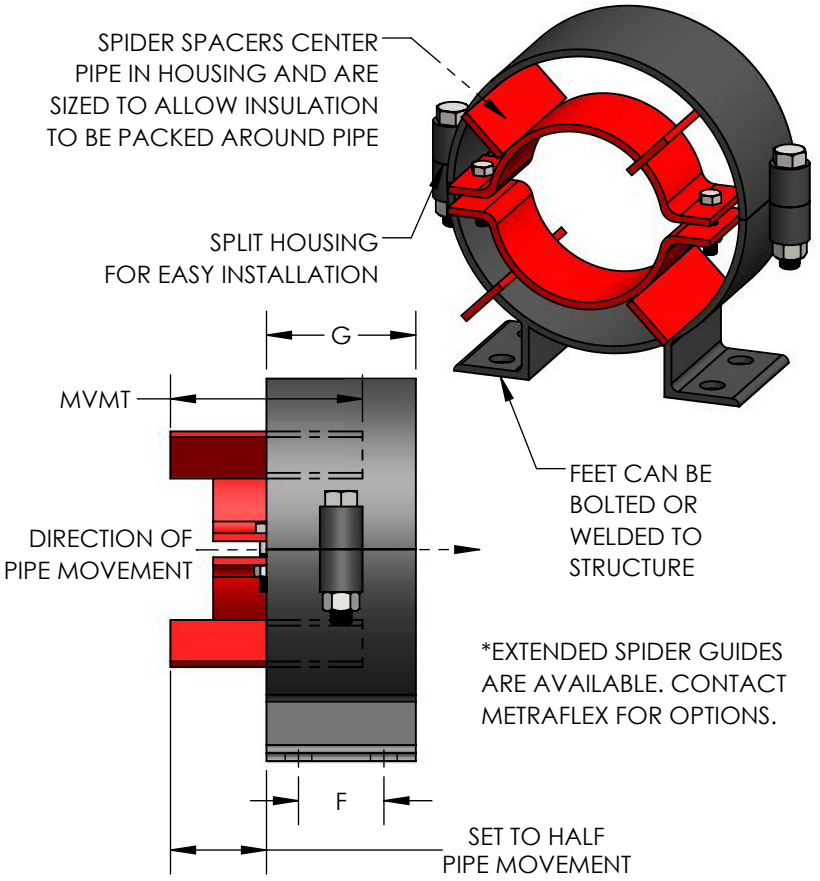

*EXTENDED SPIDER GUIDES ARE AVAILABLE. CONTACT METRAFLEX FOR OPTIONS.

PROVIDES LATERAL STABILITY TO THE PIPE TO PREVENT "BOWING".
GUIDES ARE NOT DESIGNED TO SUPPORT THE WEIGHT OF THE PIPE.

QTY	SIZE	INS	MODEL	A	B	C	D	E	F	G	MVMT	WEIGHT
	1/2"	4"	PGIV270050	6-1/4"	11-5/8"	12-1/8"	7"	5/8"	2-3/4"	4"	6"	17 LBS
	3/4"	4"	PGIV270075	6-1/4"	11-5/8"	12-1/8"	7"	5/8"	2-3/4"	4"	6"	17 LBS
	1"	4"	PGIV270100	6-1/4"	11-5/8"	12-1/8"	7"	5/8"	2-3/4"	4"	6"	17 LBS
	1-1/4"	4"	PGIV270125	6-1/4"	11-5/8"	12-1/8"	7"	5/8"	2-3/4"	4"	6"	17 LBS
	1-1/2"	4"	PGIV270150	6-1/4"	11-5/8"	12-1/8"	7"	5/8"	2-3/4"	4"	6"	17 LBS
	2"	4"	PGIV280200	7"	13-3/8"	14-1/8"	8-1/4"	5/8"	2-3/4"	4"	6"	20 LBS
	2-1/2"	4"	PGIV280250	7"	13-3/8"	14-1/8"	8-1/4"	5/8"	2-3/4"	4"	6"	20 LBS
	3"	4"	PGIV280300	7"	13-3/8"	14-1/8"	8-1/4"	5/8"	2-3/4"	4"	6"	20 LBS
	4"	4"	PGIV290400	7-7/8"	15-1/8"	16-1/8"	9-7/8"	3/4"	4"	6"	8"	40 LBS
	5"	4"	PGIV300500	8-7/8"	17"	18-1/8"	10-7/8"	3/4"	4"	6"	8"	48 LBS
	6"	4"	PGIV300600	8-7/8"	17"	18-1/8"	10-7/8"	3/4"	4"	6"	8"	48 LBS
	8"	4"	PGIV310800	9-3/4"	18-3/4"	20-1/8"	11-7/8"	3/4"	4"	6"	8"	54 LBS
	10"	4"	PGIV321000	10-7/8"	21"	22-1/8"	11-3/4"	3/4"	4"	6"	8"	61 LBS
	12"	4"	PGIV331200	12-1/8"	23-1/8"	24-1/8"	14-1/2"	7/8"	6"	8"	8"	89 LBS
	14"	4"	PGIV341400	13"	25"	26-1/8"	15-1/2"	7/8"	6"	8"	8"	102 LBS
	16"	4"	PGIV351600	14-3/4"	27-3/4"	28-1/8"	17-1/8"	1-1/8"	6"	8"	12"	110 LBS
	20"	4"	PGIV362000	16-1/2"	31-1/2"	32-1/8"	19-1/4"	1-1/8"	6"	8"	12"	150 LBS

NSF 372 - LEAD FREE
The wetted surface of this product contacted by consumable water contains less than one quarter of one percent (0.25%) of lead by weight. Material complies with state codes and standards, where applicable, requiring reduced lead content.

CUSTOMER:_____

PROJECT:_____

ENGINEER:_____

REV.	DATE

Metraflex for pipes in motion
2323 W. HUBBARD ST.
CHICAGO, IL 60612
TEL: 312-738-3800
FAX: 312-738-0415
WWW.METRAFLEX.COM

MODEL PGIV
STYLE IV SPIDER TYPE GUIDE FOR 4" INSULATION

DRAWN BY: **DKISH**	DATE: **4/3/2018**
APPROVED: **JC**	DATE: **4/3/2018**
SCALE: N/A	DRAWING NUMBER: PGIV-INS4-1